PROJECT LOCATION
Y = 129,267.90
X = 113,066.74

NORTH

VICINITY MAP
NOT TO SCALE

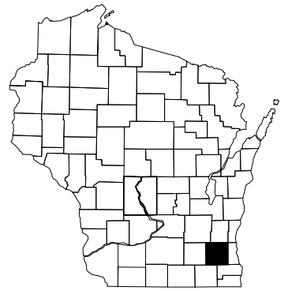

PLAN OF PROPOSED IMPROVEMENTS
FOR
WATERTOWN PLANK ROAD
UNDERWOOD CREEK
VILLAGE OF ELM GROVE
WAUKESHA COUNTY, WISCONSIN

JEWELL associates engineers, inc.
Engineers - Surveyors - Architects

560 Sunrise Drive
Spring Green, WI 53588
phone: 608-588-7484
fax: 608-588-9322

THIS DOCUMENT, THE IDEAS AND DESIGNS INCORPORATED HEREIN AS AN INSTRUMENT OF SERVICE, IS THE PROPERTY OF JEWELL ASSOCIATES ENGINEERS, INC. AND IS NOT TO BE USED IN WHOLE OR IN PART WITHOUT PRIOR WRITTEN AUTHORIZATION OF JEWELL ASSOCIATES ENGINEERS, INC.

LEGEND & ABBREVIATIONS

LEGEND

- SURVEY CONTROL POINT
- FD. I.P./REBAR
- FIRE HYDRANT
- UTILITY POLE
- GUY WIRE
- SIGN/BILLBOARD
- MH — MANHOLE
- GV — VALVE (TYPE)
- LIGHT POLE
- BENCH MARK
- INLET
- TREE
- PINE TREE
- BUILDING (OBJECT LINE)
- ROAD/PARKING LOT EDGE
- FENCE
- UTILITY LINE
- SAN. — UTILITY LINE
- TREE LINE
- CONTOURS INTERMEDIATE
- CONTOURS INDEX
- PROPERTY BORDER
- PROPERTY LINE
- LOT LINE
- RIGHT OF WAY LINE
- # — PLAN DETAIL
- # — SECTION DETAIL

ABBREVIATIONS

T – TELEPHONE	O.H.E. – OVERHEAD ELECTRIC
G – GAS	F.O. – FIBER OPTIC
E– ELECTRIC	S.S. – STORM SEWER
W.M. – WATER MAIN	SAN. – SANITARY SEWER
MH – MANHOLE	F.M. – FORCE MAIN

DRAWING INDEX

CIVIL

C1.0	TITLE SHEET
C2.0	PLAN & PROFILE SHEET
	BRIDGE PLANS
C3.0	TRAFFIC CONTROL PLAN
C4.0-C4.5	STANDARD DETAIL DRAWINGS

PROJECT DIRECTORY

OWNER
VILLAGE OF ELM GROVE
13600 JUNEAU BOULEVARD
ELM GROVE, WI 53122
(262) 782-6700
ATTN: DAVID DEANGELIS, VILLAGE MANAGER

CIVIL ENGINEER
JEWELL ASSOCIATES ENGINEERS, INC.
560 SUNRISE DRIVE
SPRING GREEN, WI 53588
PH: (608) 588-7484
FAX: (608) 588-9322
ATTN: ELLERY SCHAFFER
EMAIL: ellery.schaffer@jewellassoc.com

DEPARTMENT OF NATURAL RESOURCES
WISCONSIN DEPARTMENT OF NATURAL RESOURCES
141 NW BARSTOW ST, ROOM 180
WAUKESHA, WI 53188
ATTN: CRAIG WEBSTER
PH: (262) 574-2141
CELL: (414) 303-3011
EMAIL: Craig.Webster@Wi.Gov

DIGGERS HOTLINE
Dial 811 or (800) 242-8511
www.DiggersHotline.com

UTILITIES

TELEPHONE/FIBER OPTIC

TIME WARNER CABLE
ATTN: STEVE CRAMER
1320 N. MARTIN LUTHER KING JR. DR.
MILWAUKEE, WI 53212
PH: (414) 277-4045
EMAIL: Wis.engineering@twcable.com
steve.cramer@twcable.com

RODGERS TELECOM
ATTN: VICKIE MORAN
GABE'S TECHNICAL SERVICES
4804 NORTH 40TH STREET
SHEBOYGAN, WI 53083
PH: (920) 395-7125
EMAIL: vmoran@gabes.com

AT&T WISCONSIN
ATTN: ALPER KOLCU
2005 PEWAUKEE ROAD
WAUKESHA, WI 53188
PH: (262) 970-8494
EMAIL: Ak308x@att.com

GAS

WE ENERGIES
ATTN: LATROY BRUMFIELD
333 W. EVERETT ST. - A299
MILWAUKEE, WI 53203
PH: (414) 221-5617
EMAIL: latroy.brumfield@we-energies.com

SANITARY/STORM

VILLAGE OF ELM GROVE
ATTN: RICHARD PAUL
13600 JUNEAU BLVD.
ELM GROVE, WI 53122
PH: (262) 782-6700
EMAIL: rpauljr@elmgrovewi.org

GENERAL NOTES

COORDINATES ON THIS PLAN ARE REFERENCED TO THE WISCONSIN COUNTY COORDINATE SYSTEM (WCCS), WAUKESHA COUNTY.

NO TREES OR SHRUBS ARE TO BE REMOVED UNLESS SUCH TREES OR SHRUBS HAVE FIRST BEEN INDICATED FOR REMOVAL BY THE ENGINEER IN THE FIELD.

THE LOCATIONS OF EXISTING AND PROPOSED UTILITY INSTALLATIONS AS SHOWN ON THE PLAN ARE APPROXIMATE. THERE MAY BE OTHER UTILITY INSTALLATIONS WITHIN THE PROJECT AREA THAT ARE NOT SHOWN.

ELEVATIONS SHOWN ON THIS PLAN ARE REFERENCED TO THE NORTH AMERICAN VERTICAL DATUM OF 1988 (NAVD 88).

REMOVAL OF ASPHALTIC SURFACES WHERE AN ABUTTING ASPHALTIC SURFACE IS TO REMAIN IN PLACE SHALL REQUIRE A SAWCUT MEETING THE APPROVAL OF THE ENGINEER IN THE FIELD.

REMOVAL OF ASPHALTIC SURFACES WHERE AN ABUTTING ASPHALTIC SURFACE IS TO REMAIN IN PLACE SHALL REQUIRE A SAWCUT MEETING THE APPROVAL OF THE ENGINEER IN THE FIELD.

INLET & OUTLET ELEVATIONS FOR CULVERT PIPES AS SHOWN ON THE PLAN MAY BE ADJUSTED TO FIT EXISTING FIELD CONDITIONS.

THE LOCATION OF ALL PERMANENT SIGNING SHALL BE VERIFIED BY THE ENGINEER IN THE FIELD PRIOR TO PLACEMENT.

ORIGINAL PLANS PREPARED BY:

SIGNATURE DATE

DESIGN IS IN ACCORDANCE WITH "A POLICY ON GEOMETRIC DESIGN OF HIGHWAYS AND STREETS" 2004 (AASHTO) EXCEPT AS PROVIDED FOR IN THE SPECIAL PROVISIONS. ALL WORK SHALL BE ACCOMPLISHED ACCORDING TO THE STATE OF WISCONSIN "STANDARD STANDARD FOR HIGHWAY AND STRUCTURE CONSTRUCTION" 2015 EDITION.

VILLAGE OF ELM GROVE

RECOMMENDED FOR APPROVAL

Watertown Plank Road Bridge
Elm Grove, Wisconsin

Date
7-23-15

Date	Revision
-	-
-	-

Drawing Name
Title Sheet

Sheet No.
C1.0

Jewell Project Number
E33010

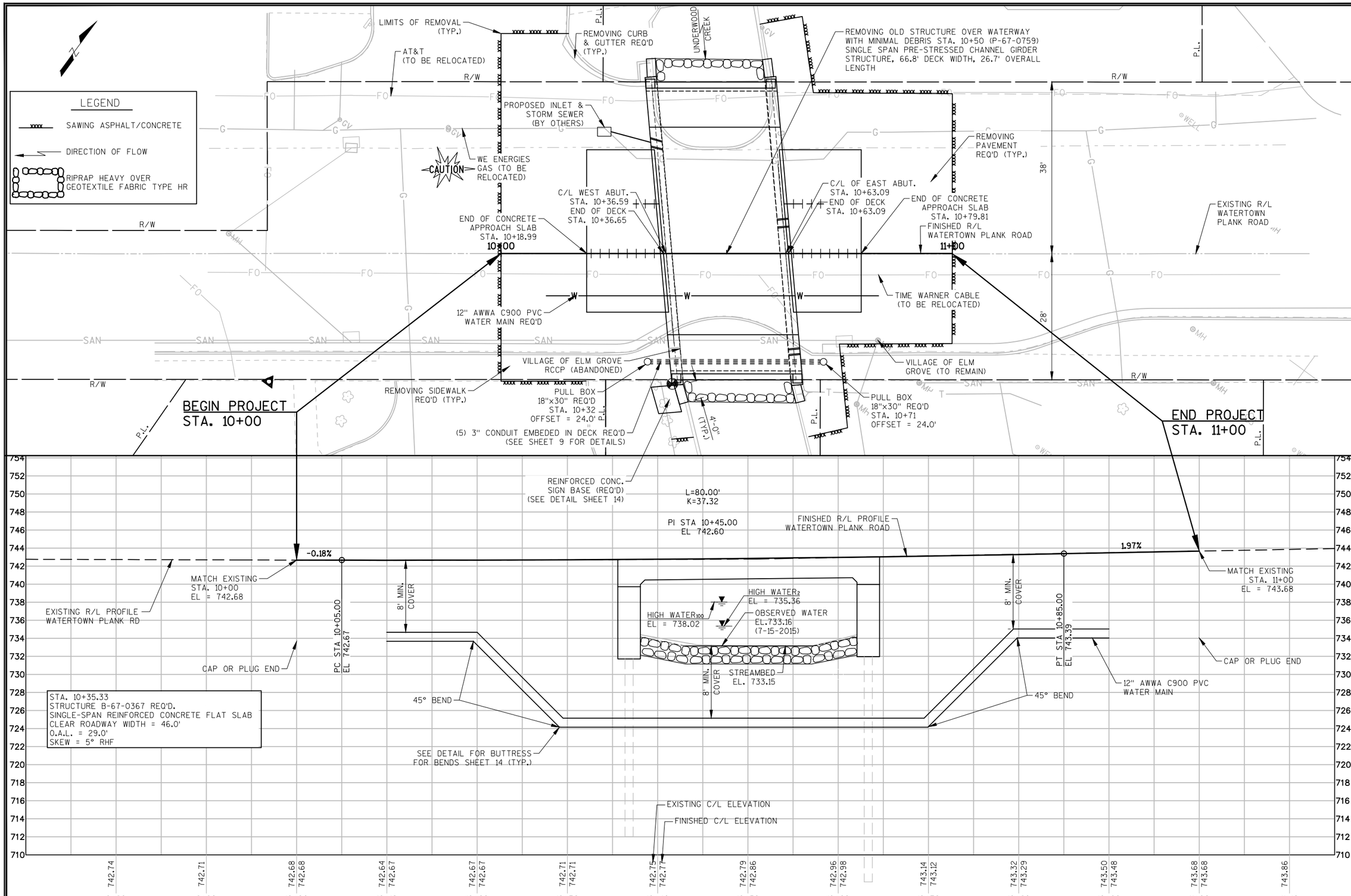

JEWELL associates engineers, inc.
Engineers - Surveyors - Architects

560 Sunrise Drive
Spring Green, WI 53588
phone: 608-588-7484
fax: 608-588-9322

THIS DOCUMENT, THE IDEAS AND DESIGNS INCORPORATED HEREIN AS AN INSTRUMENT OF SERVICE, IS THE PROPERTY OF JEWELL ASSOCIATES ENGINEERS, INC. AND IS NOT TO BE USED IN WHOLE OR IN PART WITHOUT PRIOR WRITTEN AUTHORIZATION OF JEWELL ASSOCIATES ENGINEERS, INC.

Watertown Plank Road Bridge
Elm Grove, Wisconsin

Date
10/29/2015

Date	Revision
-	-
-	-

Drawing Name
Plan & Profile

Sheet No.
C2.0

Jewell Project Number
E33010

FILE NAME : S:\PROJECTS\E33010 ELM GROVE – WATERTOWN PLANK RD BRIDGE\STRUCTURE\CAD FILES\FINALS\PLAN VIEW.DWG
LAYOUT : LAYOUT1
PLOT DATE : 11/17/2015
PLOT TIME : 9:58:48 AM
PLOT BY : HANOLD, ROBERT
PLOT SCALE : 1" = 1'

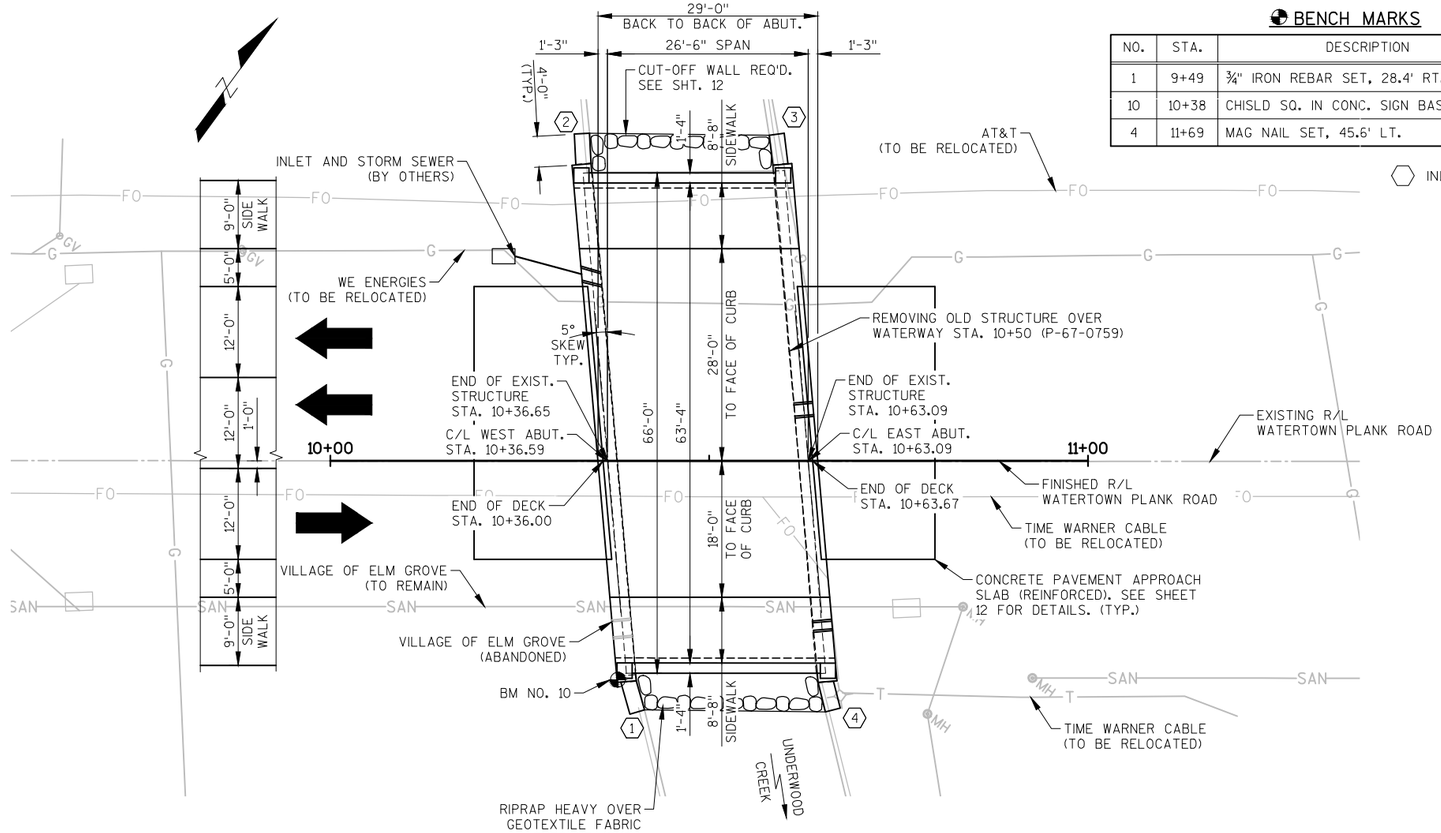

PLAN B-67-0367

(SINGLE-SPAN REINFORCED CONCRETE FLAT SLAB)

BENCH MARKS

NO.	STA.	DESCRIPTION	ELEV.
1	9+49	¾" IRON REBAR SET, 28.4' RT.	742.88
10	10+38	CHISLD SQ. IN CONC. SIGN BASE, 28.9' RT.	746.05
4	11+69	MAG NAIL SET, 45.6' LT.	745.38

⬡ INDICATES WING NUMBER

DESIGN DATA

LIVE LOAD:

DESIGN LOADING ____ HL-93
INVENTORY RATING FACTOR ____ RF=1.33
OPERATING RATING FACTOR ____ RF=1.73
WISCONSIN STANDARD PERMIT VEHICLE (WIS-SPV) ____ 250 KIPS

STRUCTURE IS DESIGNED FOR A FUTURE WEARING SURFACE OF 20 P.S.F.

MATERIAL PROPERTIES:

CONCRETE MASONRY, SLAB ____ f'c = 4,000 P.S.I.
ALL OTHER ____ f'c = 3,500 P.S.I.
HIGH-STRENGTH BAR STEEL REINFORCEMENT, GRADE 60 ____ fy = 60,000 P.S.I.

FOUNDATION DATA

ABUTMENTS TO BE SUPPORTED ON HP PILE 10-INCH X 42 LB DRIVEN TO A REQUIRED DRIVING RESISTANCE OF 120 TONS PER PILE AS DETERMINED BY THE MODIFIED GATES DYNAMIC FORMULA. ESTIMATE 25 FT PILE LENGTHS AT WEST ABUTMENT AND 32 FT PILE LENGTHS AT EAST ABUTMENT.

**THE FACTORED AXIAL RESISTANCE OF PILES IN COMPRESSION USED FOR DESIGN IS THE REQUIRED DRIVING RESISTANCE MULTIPLIED BY A RESISTANCE FACTOR OF 0.5 USING MODIFIED GATES TO DETERMINE DRIVEN PILE CAPACITY.

TRAFFIC DATA

A.D.T. (2016) ____ 10,400
A.D.T. (2036) ____ 15,460
DESIGN SPEED ____ 30 M.P.H.

HYDRAULIC DATA

100 YEAR FREQUENCY
DRAINAGE AREA ____ 10.4 SQ. MI.
Q_{100} TOTAL ____ 826 C.F.S.
THROUGH STRUCTURE ____ 826 C.F.S.
OVERTOPPING ROADWAY ____ 0 C.F.S.
VELOCITY - THROUGH STRUCTURE ____ 6.58 F.P.S.
WATERWAY AREA - THROUGH STRUCTURE ____ 125.6 SQ. FT.
HIGH $WATER_{100}$ ELEVATION ____ 738.02
SCOUR CRITICAL CODE ____ 5

EROSION CONTROL
Q_2 ____ 154 C.F.S.
HIGH $WATER_2$ ELEVATION ____ 735.36

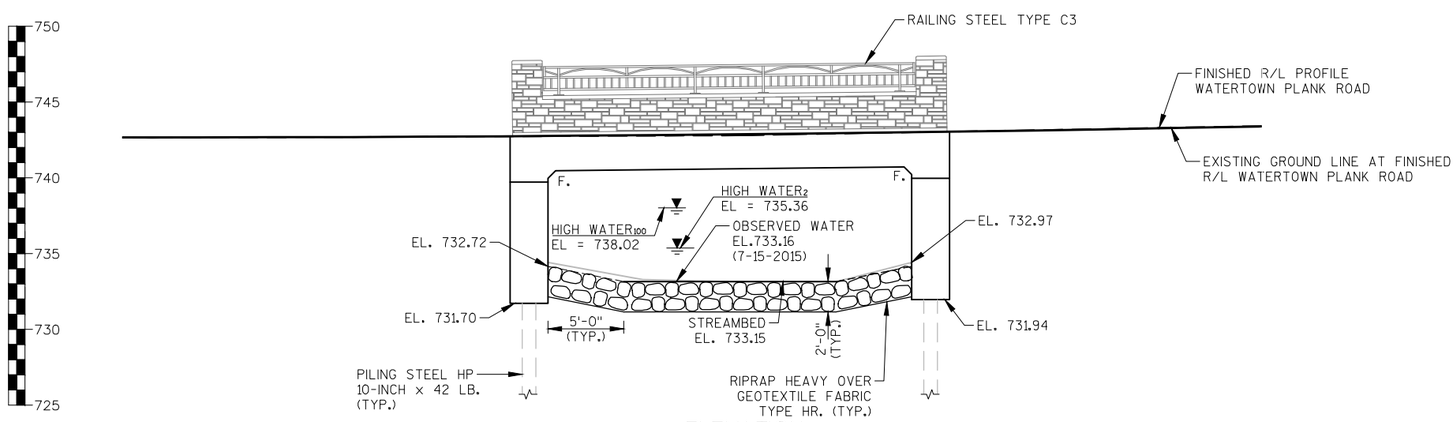

ELEVATION

(NORMAL TO UNDERWOOD CREEK)

LIST OF DRAWINGS

GENERAL PLAN ____ 1.
CROSS SECTION AND QUANTITIES ____ 2.
SUBSURFACE EXPLORATION ____ 3.
WEST ABUTMENT ____ 4.
WEST ABUTMENT DETAILS ____ 5.
EAST ABUTMENT ____ 6.
EAST ABUTMENT DETAILS ____ 7.
SUPERSTRUCTURE ____ 8.
SUPERSTRUCTURE DETAILS ____ 9.
RAILING LAYOUT - PARAPET DETAILS ____ 10.
RAILING STEEL TYPE C3 ____ 11.
CONSTRUCTION DETAILS (1 OF 3) ____ 12.
CONSTRUCTION DETAILS (2 OF 3) ____ 13.
CONSTRUCTION DETAILS (3 OF 3) ____ 14.
PRECAST GENERAL PLAN ____ 15.

DESIGN CONSULTANT
PATRICK BOLAND, PE
(608) 588-7484

NO.	DATE	REVISION	BY

JEWELL associates engineers, inc.
Engineers - Surveyors - Architects
560 SUNRISE DRIVE
SPRING GREEN, WI 53588
PHONE: (608) 588-7484
FAX: (608) 588-9322

STRUCTURE B-67-0367

WATERTOWN PLANK ROAD OVER UNDERWOOD CREEK

COUNTY: WAUKESHA | ~~TOWN/CITY~~/VILLAGE: ELM GROVE

DESIGN SPEC: AASHTO LRFD BRIDGE DESIGN SPECIFICATIONS

DESIGNED BY: RBH | DESIGN CK'D.: PTB | DRAWN BY: RBH | PLANS CK'D.: PTB

GENERAL PLAN

SHEET 1 OF 15

FILE NAME : S:\PROJECTS\E33010 ELM GROVE - WATERTOWN PLANK RD BRIDGE\STRUCTURE\CAD FILES\FINALS\01_GENERAL PLAN.DWG
LAYOUT : LAYOUT1
PLOT DATE : 11/17/2015
PLOT TIME : 9:59:22 AM
PLOT BY : HANOLD, ROBERT
PLOT SCALE : 1" = 1'

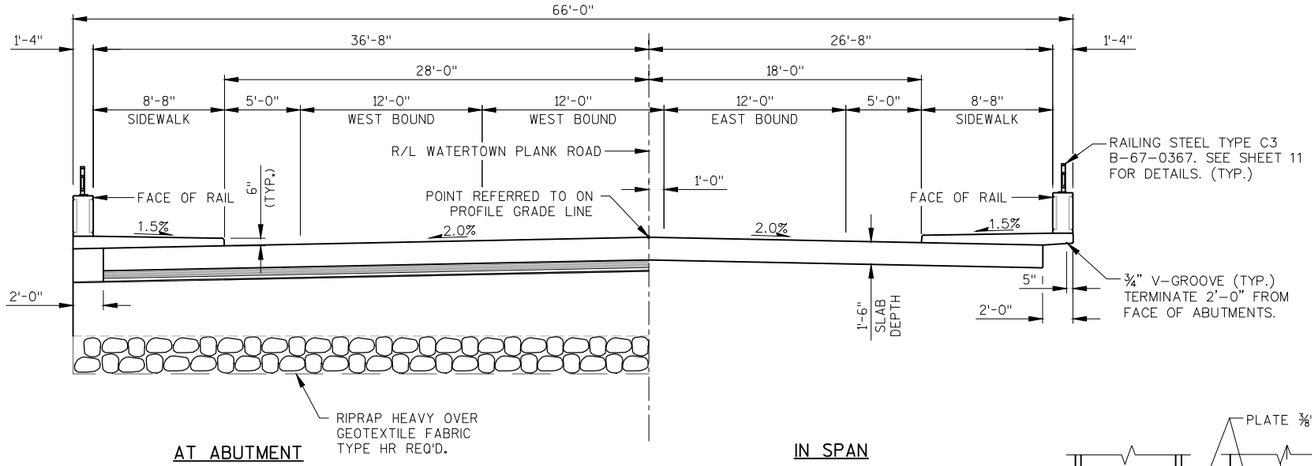

PROPOSED CROSS-SECTION THROUGH ROADWAY

LOOKING EAST

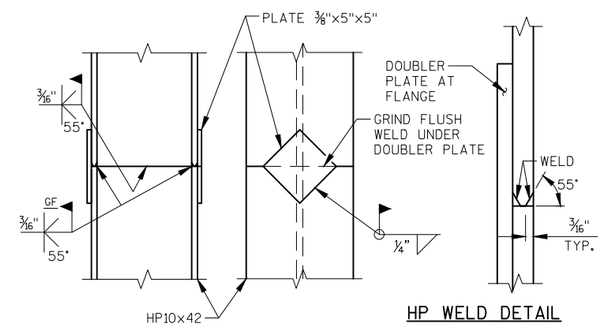

HP WELD DETAIL

FLANGE SHOWN, WEB SIMILAR

PILE SPLICE DETAIL

STEEL "HP" PILE MATERIAL SHALL BE ASTM A 572 GRADE 50.

GENERAL NOTES

DRAWINGS SHALL NOT BE SCALED.

ELEVATIONS SHOWN ON THE PLAN ARE REFERENCED TO THE NORTH AMERICA VERTICAL DATUM OF 1988 (NAVD 88).

BAR STEEL REINFORCEMENT SHALL BE EMBEDDED 2" CLEAR UNLESS OTHERWISE SHOWN OR NOTED.

THE FIRST DIGIT OR FIRST TWO DIGITS OF A BAR MARK SIGNIFIES THE BAR SIZE.

JOINT FILLER SHALL CONFORM TO A.A.S.H.T.O. DESIGNATION M153, TYPE I, II OR III OR A.A.S.H.T.O. DESIGNATION M213.

THE SLOPE OF FILL IN FRONT OF THE ABUTMENTS SHALL BE COVERED WITH RIPRAP HEAVY AND GEOTEXTILE FABRIC HR TO THE EXTENT SHOWN ON SHEET 1 AND IN THE ABUTMENT DETAILS, OR AS DIRECTED BY THE ENGINEER IN THE FIELD.

AT THE BACK FACE OF ABUTMENTS, ALL VOLUME WHICH CANNOT BE PLACED BEFORE ABUTMENT CONSTRUCTION AND IS NOT OCCUPIED BY THE NEW STRUCTURE SHALL BE BACKFILLED WITH BACKFILL STRUCTURE.

THE QUANTITY OF BACKFILL STRUCTURE, BID ITEM 210.0100, IS CALCULATED BASED ON THE APPLICABLE FIGURES 12.6-1 AND 12.6-2 IN THE WISCONSIN DEPARTMENT OF TRANSPORTATION BRIDGE MANUAL.

THE GRADATION OF THE STRUCTURE BACKFILL SHALL MEET THE REQUIREMENTS OF SECTION 209 OF THE STANDARD SPECIFICATIONS FOR GRADE 1 MATERIAL.

APPLY PROTECTIVE SURFACE TREATMENT TO THE ENTIRE TOP OF THE DECK AND RAISED SIDEWALKS.

THE EXISTING STRUCTURE (P-67-0759) IS A SINGLE SPAN CONCRETE CHANNEL BEAM DECK GIRDER. THE STRUCTURE IS 66.8' WIDE BY 26.7' LONG AND SHALL BE REMOVED.

ALL STATIONS AND ELEVATIONS SHOWN ARE IN FEET.

THE EXISTING GROUNDLINE SHALL BE THE UPPER LIMITS OF EXCAVATION FOR STRUCTURES.

SLAB FALSEWORK SHALL BE SUPPORTED ON PILES OR THE SUBSTRUCTURE UNLESS AN ALTERNATIVE METHOD IS APPROVED BY THE ENGINEER IN THE FIELD.

TOTAL ESTIMATED QUANTITIES

ITEM NUMBER	ITEM DESCRIPTION	UNIT	W. ABUT	E. ABUT.	SUPER.	TOTALS
203.0600.S	REMOVING OLD STRUCTURE OVER WATERWAY WITH MINIMAL DEBRIS STA. 10+50	LS	--	--	--	1
206.1000	EXCAVATION FOR STRUCTURES BRIDGES B-67-0367	CY	--	--	--	1
210.0100	BACKFILL STRUCTURE	CY	360	360	--	720
415.0410	CONCRETE PAVEMENT APPROACH SLAB	SY	68	67	--	135
502.0100	CONCRETE MASONRY BRIDGES	CY	61	60.5	134.5	256
502.3200	PROTECTIVE SURFACE TREATMENT	SY	--	--	210	210
502.5002	MASONRY ANCHORS TYPE L NO. 4 BARS	EACH	--	--	--	24
505.0400	BAR STEEL REINFORCEMENT HS STRUCTURES	LB	4,610	4,620	*1,220	10,450
505.0600	BAR STEEL REINFORCEMENT HS COATED STRUCTURES	LB	400	400	*22,440	23,240
512.0600	PILING STEEL SHEET PERMANENT DRIVEN	SF	--	--	--	120
513.7016	RAILING STEEL TYPE C3 B-67-0367	LF	--	--	49	49
516.0500	RUBBERIZED MEMBRANE WATERPROOFING	SY	12.5	12.5	--	25
517.1015.S	CONCRETE STAINING MULTI-COLOR B-67-0367	SF	--	--	340	340
517.1050.S	ARCHITECTURAL SURFACE TREATMENT B-67-0367	SF	--	--	340	340
550.1100	PILING STEEL HP 10-INCH X 42 LB	LF	225	290	--	515
606.0300	RIPRAP HEAVY	CY	67.5	67.5	--	135
645.0120	GEOTEXTILE FABRIC TYPE HR	SY	125	125	--	250
SPV.0105.01	REMOVING, RETROFITTING, AND REINSTALLING RAILINGS	LS	--	--	--	1
SPV.0105.02	BYPASSING BASEFLOW AND PUMPING OPERATIONS	LS	--	--	--	1
SPV.0105.03	REMOVING & REINSTALLING CONCRETE BASE FOR "ELM GROVE PARK AND SHOP" SIGN	LS	--	--	--	1
	NON-BID ITEMS					
	FILLER SIZE			½"&¾"		

NOTE: * THIS QUANTITY INCLUDES THE MISCELLANEOUS BAR QUANTITY.

NON STRUCTURAL BID ITEMS AND QUANTITIES ARE LISTED IN BID FORM OF BID DOCUMENT

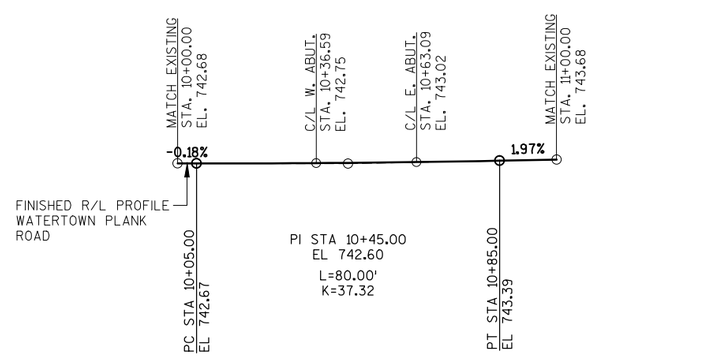

WATERTOWN PLANK ROAD - PROFILE GRADE LINE

NO.	DATE	REVISION	BY

STRUCTURE B-67-0367

DRAWN BY RBH PLANS CK'D. PTB

CROSS SECTION AND QUANTITIES

SHEET 2 OF 15

8

8

SOIL BORINGS

BY: PROFESSIONAL SERVICE INDUSTRIES, INC.
821 CORPORATE COURT
WAUKESHA, WI 53189

ON: AUGUST 13, 2015

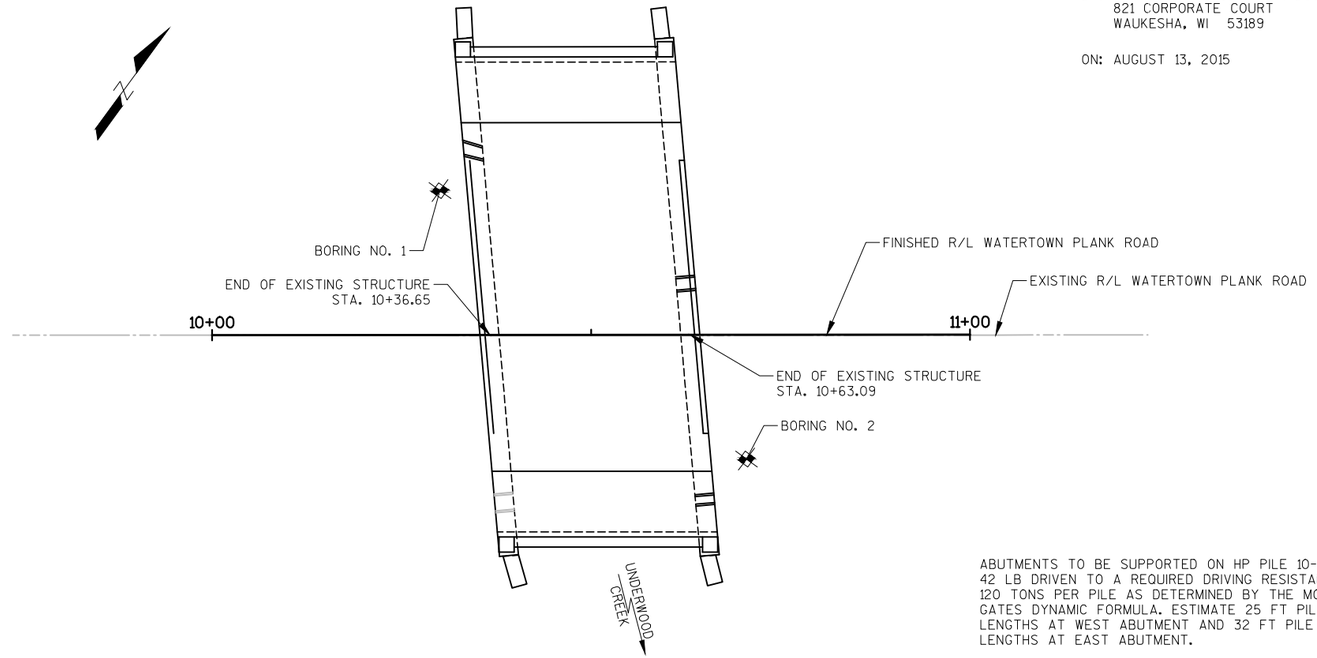

PLAN B-67-0367

ABUTMENTS TO BE SUPPORTED ON HP PILE 10-INCH X 42 LB DRIVEN TO A REQUIRED DRIVING RESISTANCE OF 120 TONS PER PILE AS DETERMINED BY THE MODIFIED GATES DYNAMIC FORMULA. ESTIMATE 25 FT PILE LENGTHS AT WEST ABUTMENT AND 32 FT PILE LENGTHS AT EAST ABUTMENT.

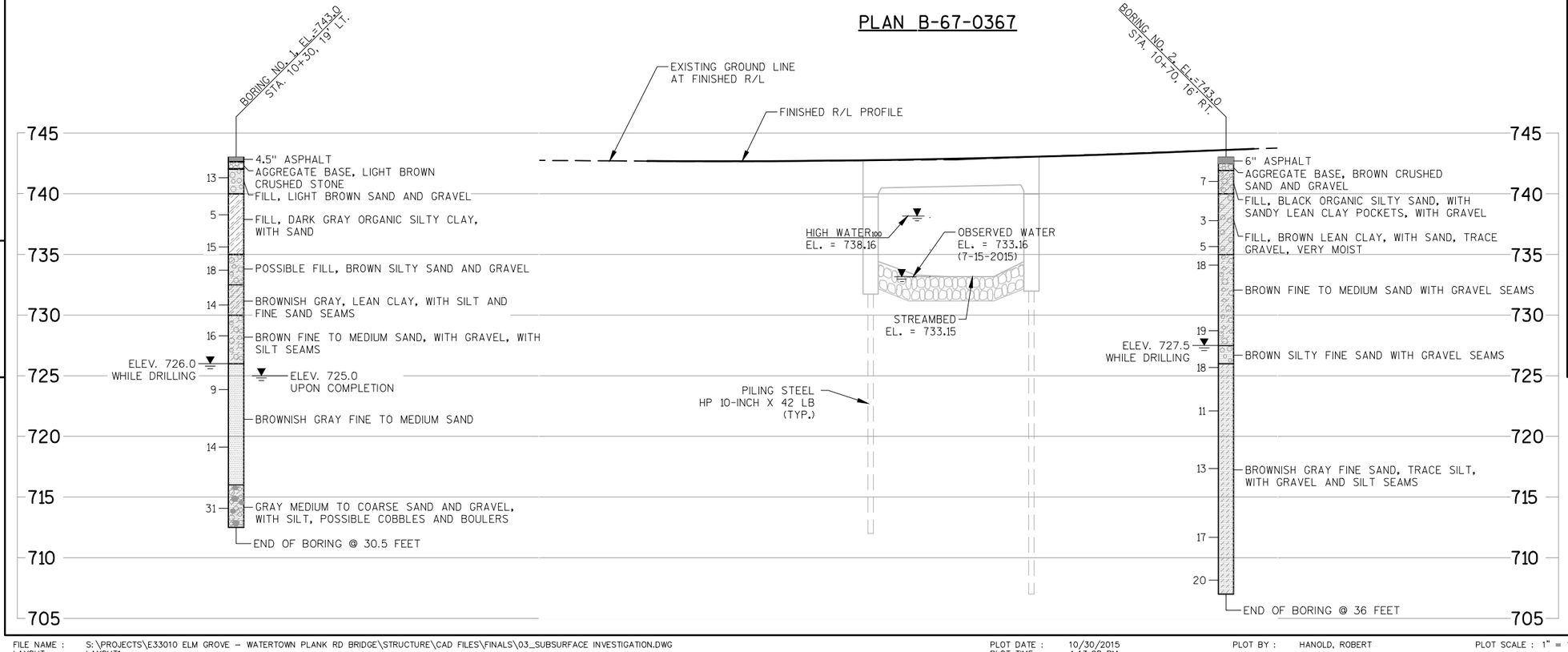

ABBREVIATIONS

F – Fine M – Medium C – Course
Ws – Weathered So – Sound

MATERIAL SYMBOLS

Asphalt, Silt, Sandstone, Sand, Peat, Limestone, Gravel, Clay, Igneous Rock

LEGEND OF PROBING

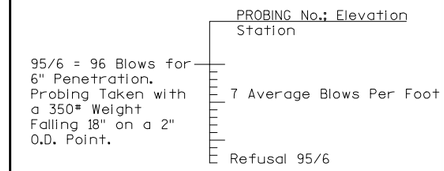

LEGEND OF BORING

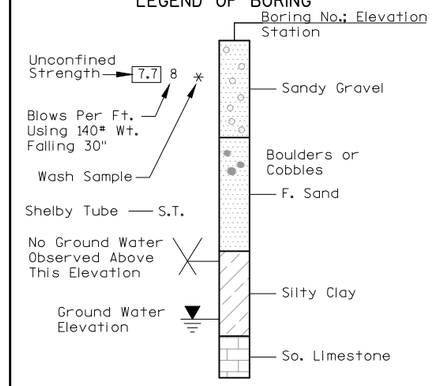

UNLESS OTHERWISE SPECIFIED, THE BLOWS PER FOOT AT THE LOCATIONS INDICATED ARE BASED ON DRIVING A 2" O.D. X 1.4" I.D. SPLIT SPOON SAMPLER WITH A 140# HAMMER HAVING A FREE FALL OF 30". THE BLOW COUNT IS TAKEN IN UNDISTURBED SOIL IMMEDIATELY BELOW A CASED OR OPEN HOLE ELIMINATING SIDE FRICTION ON THE DRIVE PIPE.

SUBSURFACE EXPLORATION FOR FOUNDATION DESIGN AND BIDDERS INFORMATION

TO OBTAIN RELATIVE DATA CONCERNING THE CHARACTER OF MATERIAL IN AND UPON WHICH THE FOUNDATION MIGHT BE BUILT, BORINGS AND/OR SOUNDINGS WERE MADE AT POINTS APPROXIMATELY AS INDICATED ON THIS DRAWING. THE DATA PRESENTED HEREIN REPRESENTS THE FINDINGS OF THE SUBSURFACE EXPLORATIONS MADE. HOWEVER, BECAUSE THE DEPTHS INVESTIGATED ARE LIMITED AND THE AREA OF THE BORINGS AND/OR SOUNDINGS IS VERY SMALL IN RELATION TO THE ENTIRE AREA, THE WISCONSIN DEPARTMENT OF TRANSPORTATION DOES NOT WARRANT CONDITIONS BELOW THE DEPTHS INVESTIGATED OR THAT THE CLASSIFICATION OF MATERIAL ENCOUNTERED IN THESE INVESTIGATIONS IS NECESSARILY TYPICAL OF THE ENTIRE SITE.

NO.	DATE	REVISION	BY

STRUCTURE B-67-0367

DRAWN BY TMS PLANS CK'D. PTB

SUBSURFACE EXPLORATION

SHEET 3 OF 15

8

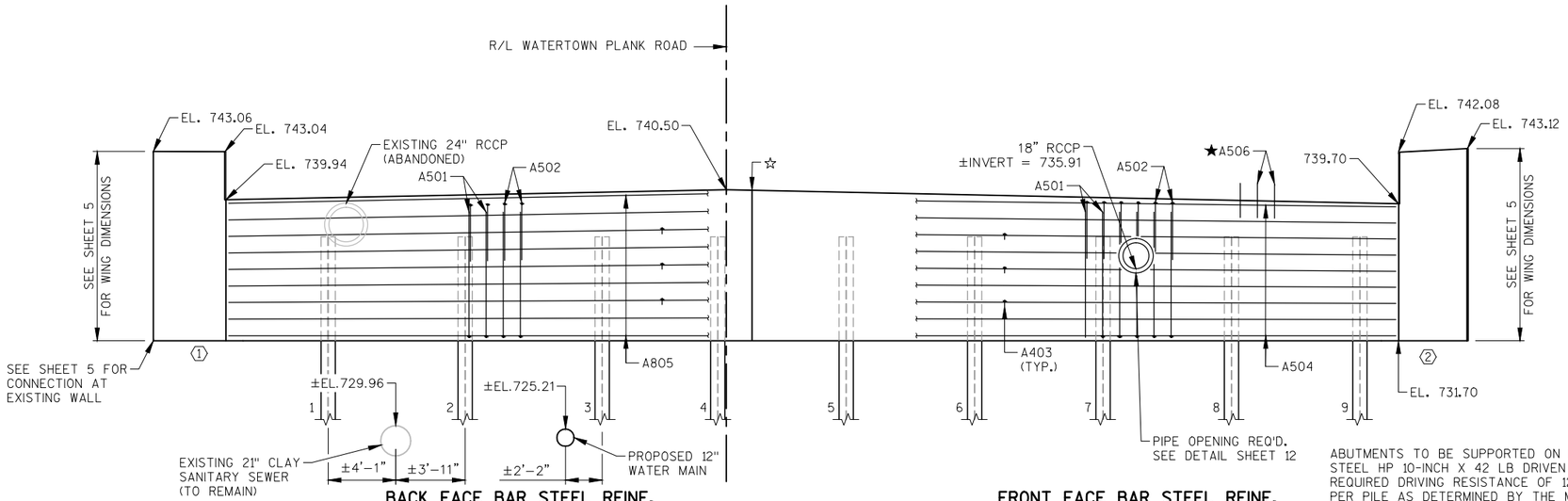

ABUTMENTS TO BE SUPPORTED ON PILING STEEL HP 10-INCH X 42 LB DRIVEN TO A REQUIRED DRIVING RESISTANCE OF 120 TONS PER PILE AS DETERMINED BY THE MODIFIED GATES DYNAMIC FORMULA. ESTIMATE 25 FT PILE LENGTHS AT WEST ABUTMENT AND 32 FT PILE LENGTHS AT EAST ABUTMENT.

ELEVATION

(WEST ABUTMENT LOOKING WEST)

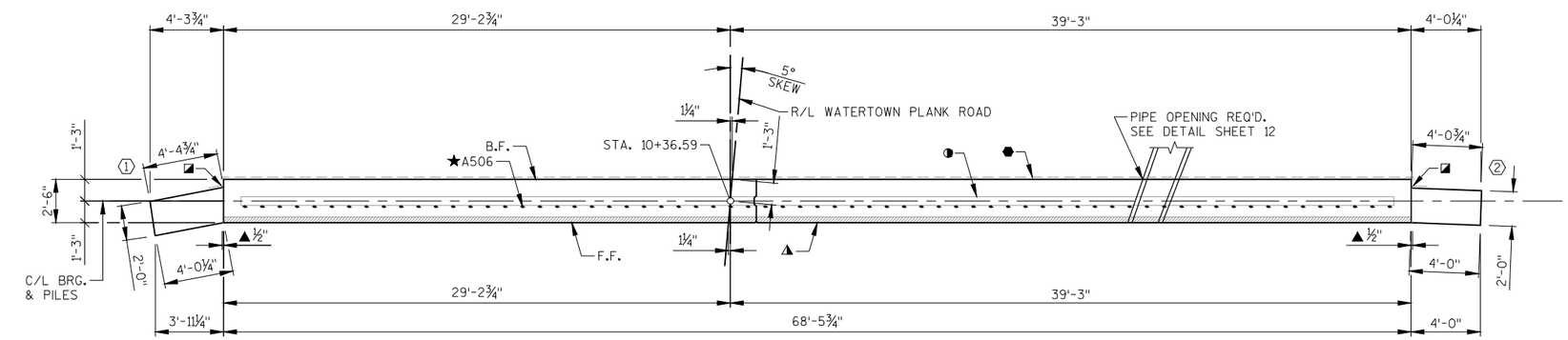

PLAN

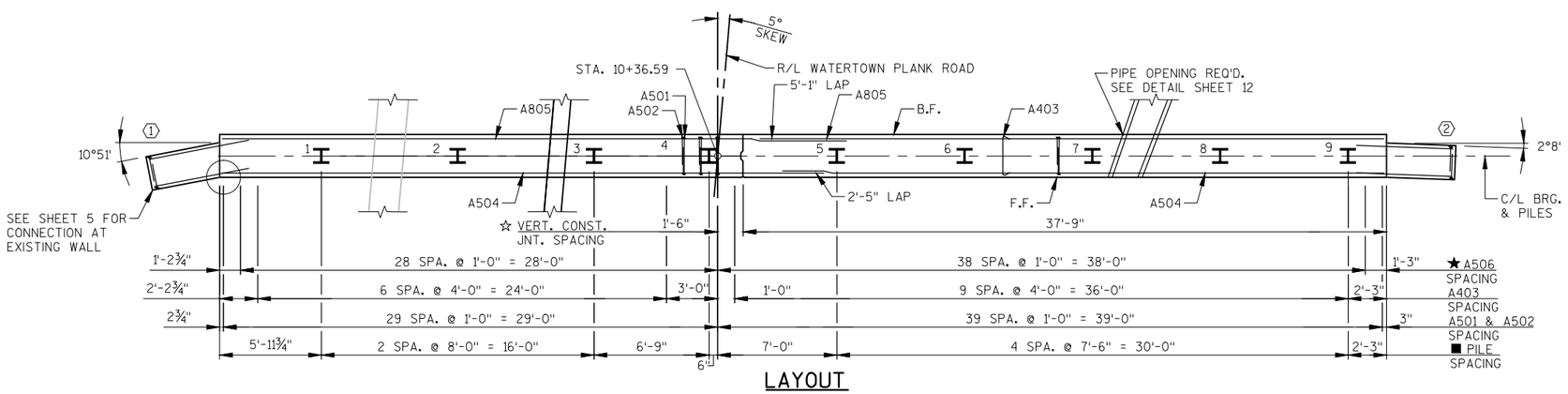

LAYOUT

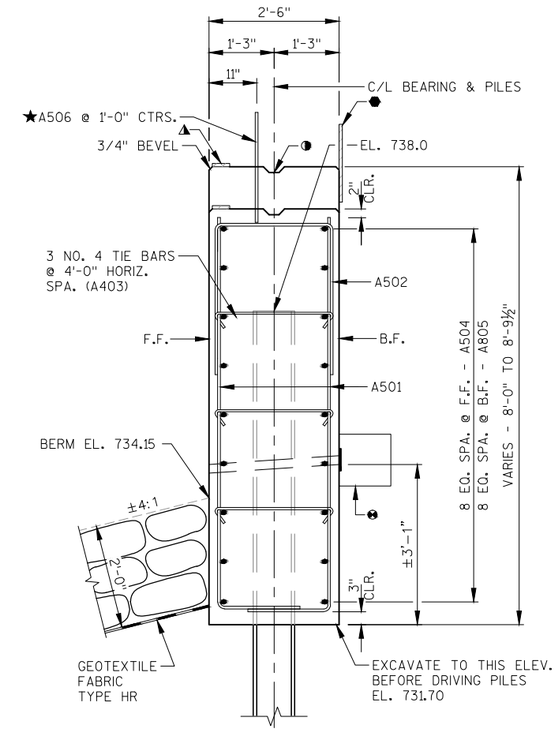

TYPICAL SECTION THROUGH ABUTMENT BODY

LEGEND

- ◑ KEYED CONSTRUCTION JOINT FORMED BY SURFACED & BEVELED 2x6.
- ◪ VERTICAL 18" RUBBERIZED MEMBRANE WATERPROOFING EXTEND FROM 9" BELOW BRIDGE SEAT TO 1" BELOW TOP OF WINGS.
- ⬢ 18" RUBBERIZED MEMBRANE WATERPROOFING. (HORIZONTAL)
- ▲ ½" FILLER EXTEND AS SHOWN. SEAL ALL EXPOSED HORIZ. & VERT. SURFACES OF FILLER WITH NON-STAINING GRAY, NON-BITUMINUOS JOINT SEALER. (1" DEEP & HOLD ⅛" BELOW SURFACE OF CONCRETE)
- ◮ ¾" x 4" PREFORMED FILLER, EXTEND FULL LENGTH OF ABUTMENTS BETWEEN EDGES OF SLAB.
- ★ A506 BARS MAY BE PLACED AFTER CONCRETE IS POURED BUT BEFORE IT HAS TAKEN ITS INITIAL SET. EMBED BAR 1'-0".
- ■ PILE SPACING MEASURED AT BASE OF SHAFT.
- ❸ 2" DIAMETER (NON-METALIC) WEEP HOLE AT 20'-0" SPA. USE FILTER CLOTH W/ SELECT GRANULAR MATERIAL AT EACH HOLE ON B.F. (12"x12"x12" MIN.) COST INCIDENTAL TO "CONCRETE MASONRY BRIDGES".
- ☆ VERTICAL CONSTRUCTION JOINT. KEYWAY FORMED BY BEVELED 2x8. SEE SHEET 12 FOR ALTERNATE CONSTRUCTION JOINT DETAILS.

NOTES

SOME BARS HAVE BEEN OMITTED FOR CLARITY. SEE SHEET 5 FOR BILL OF BARS.

DO NOT PLACE FILL HIGHER THAN 3 FEET FROM BOTTOM OF ABUTMENT UNTIL SUPERSTRUCTURE IS IN PLACE.

SPACE REINFORCEMENT TO MISS PILING

F.F. – FRONT FACE

B.F. – BACK FACE

NO.	DATE	REVISION	BY

STRUCTURE B-67-0367

DRAWN BY RBH | PLANS CK'D. PTB

WEST ABUTMENT

SHEET 4 OF 15

8

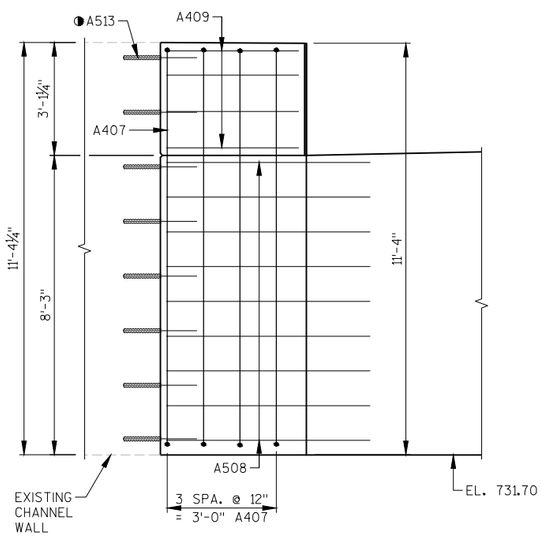

F.F. ELEVATION - WING 1

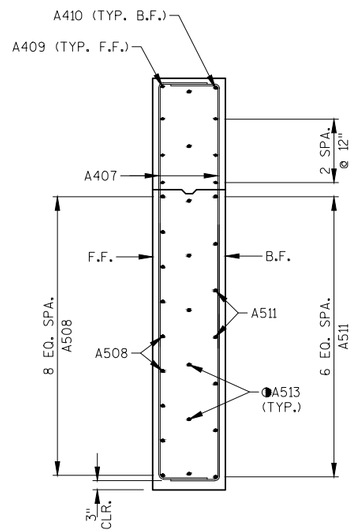

SECTION A-A

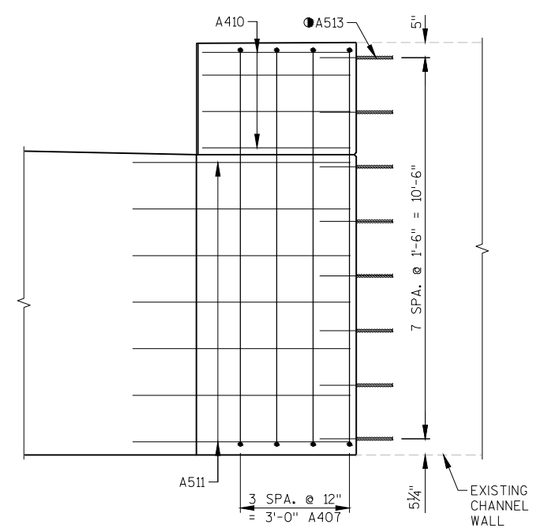

B.F. ELEVATION - WING 1

BILL OF BARS
WEST ABUTMENT

400 LB (COATED)
4,610 LB (UNCOATED)

BAR MARK	NO. REQ'D.	LENGTH	BENT	COAT	LOCATION
A501	138	9-0	X		BODY - VERT. - F.F. & B.F.
A502	69	9-1	X		BODY - VERT. - TOP
A403	51	2-8	X		TIE BARS
A504	18	35-4			BODY - HORIZ. - F.F.
A805	18	36-8			BODY - HORIZ. - B.F.
A506	67	2-0			BODY - VERT. - DOWELS
A407	16	13-2	X	X	WINGS 1 & 2 - VERT. - F.F. & B.F.
A508	18	5-7		X	WINGS 1 & 2 - HORIZ. - F.F. - BOTTOM
A409	12	3-7		X	WINGS 1 & 2 - HORIZ. - TOP
A410	4	4-0		X	WING 1 - HORIZ. - B.F. - TOP
A511	7	6-0		X	WING 1 - HORIZ. - B.F. - BOTTOM
A512	7	5-8		X	WING 2 - HORIZ. - B.F. - BOTTOM
◑ A513	16	2-0		X	WINGS 1 & 2 - TIE BARS AT EXISTING WALL

NOTES

SOME BARS HAVE BEEN OMITTED FOR CLARITY. SEE THIS SHEET FOR BILL OF BARS.

◑ DRILL BARS INTO EXISTING CONCRETE CHANNEL WALL (CONCRETE MASONRY ANCHOR NOT REQ'D). DRILLING INCIDENTAL TO BID ITEM "CONCRETE MASONRY STRUCTURES".

THE FIRST DIGIT OF A BAR MARK SIGNIFIES THE BAR SIZE.

DIMENSIONS IN BENDING DETAILS ARE OUT TO OUT OF BAR.

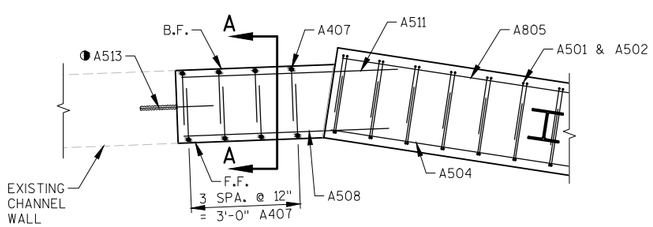

PLAN VIEW - WING 1

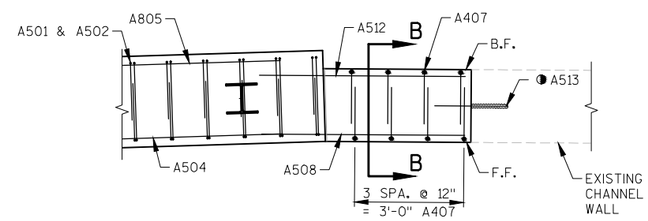

PLAN VIEW - WING 2

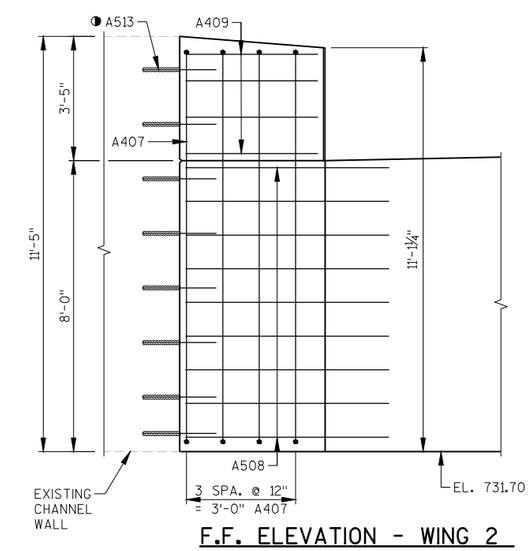

F.F. ELEVATION - WING 2

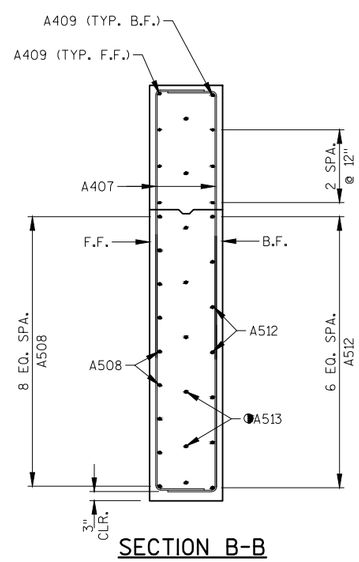

SECTION B-B

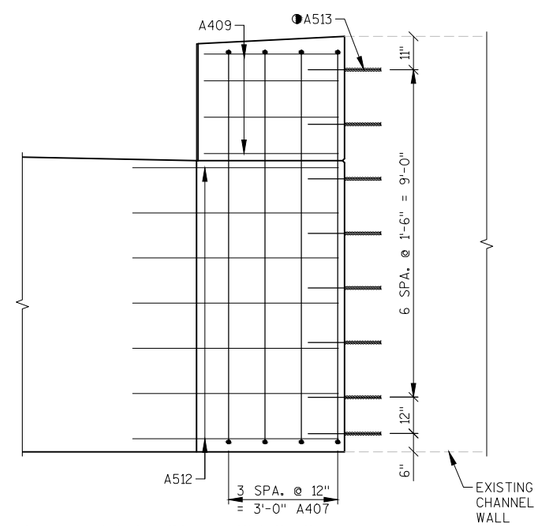

B.F. ELEVATION - WING 2

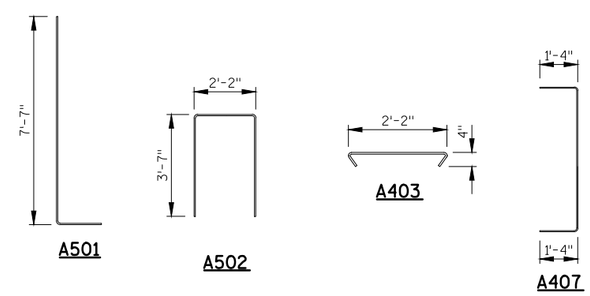

NO.	DATE	REVISION	BY

STRUCTURE B-67-0367

DRAWN BY RBH | PLANS CK'D. PTB

WEST ABUTMENT DETAILS

SHEET 5 OF 15

8

8

FILE NAME : S:\PROJECTS\E33010 ELM GROVE - WATERTOWN PLANK RD BRIDGE\STRUCTURE\CAD FILES\FINALS\04-06_ABUTMENTS.DWG
LAYOUT : WEST ABUT DET.

PLOT DATE : 11/17/2015
PLOT TIME : 10:00:53 AM

PLOT BY : HANOLD, ROBERT

PLOT SCALE : 1" = 1'

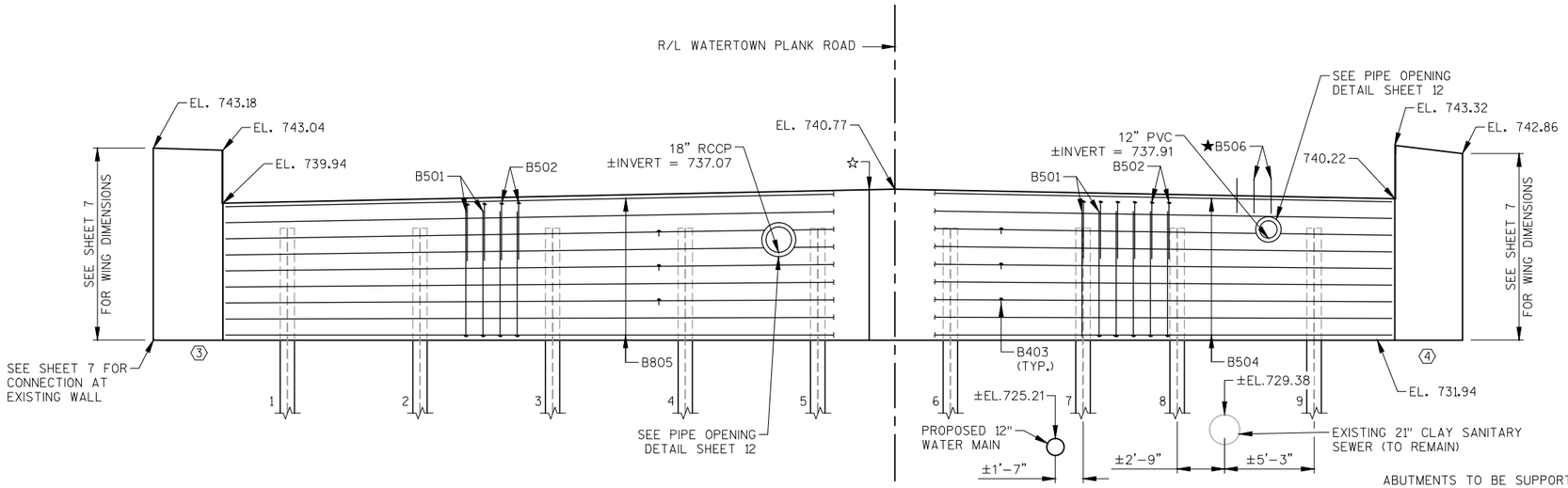

BACK FACE BAR STEEL REINF.

FRONT FACE BAR STEEL REINF.

ELEVATION

(EAST ABUTMENT LOOKING EAST)

ABUTMENTS TO BE SUPPORTED ON PILING STEEL HP 10-INCH X 42 LB DRIVEN TO A REQUIRED DRIVING RESISTANCE OF 120 TONS PER PILE AS DETERMINED BY THE MODIFIED GATES DYNAMIC FORMULA. ESTIMATE 25 FT PILE LENGTHS AT WEST ABUTMENT AND 32 FT PILE LENGTHS AT EAST ABUTMENT.

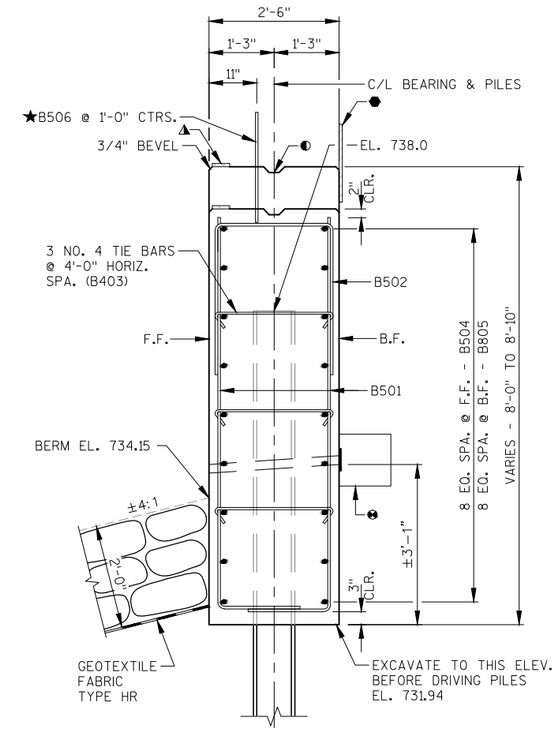

TYPICAL SECTION THROUGH ABUTMENT BODY

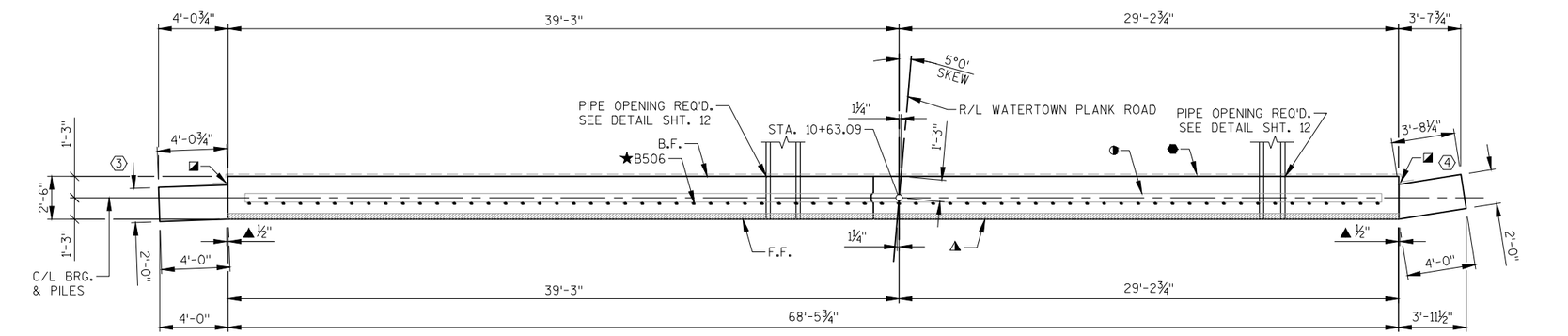

PLAN

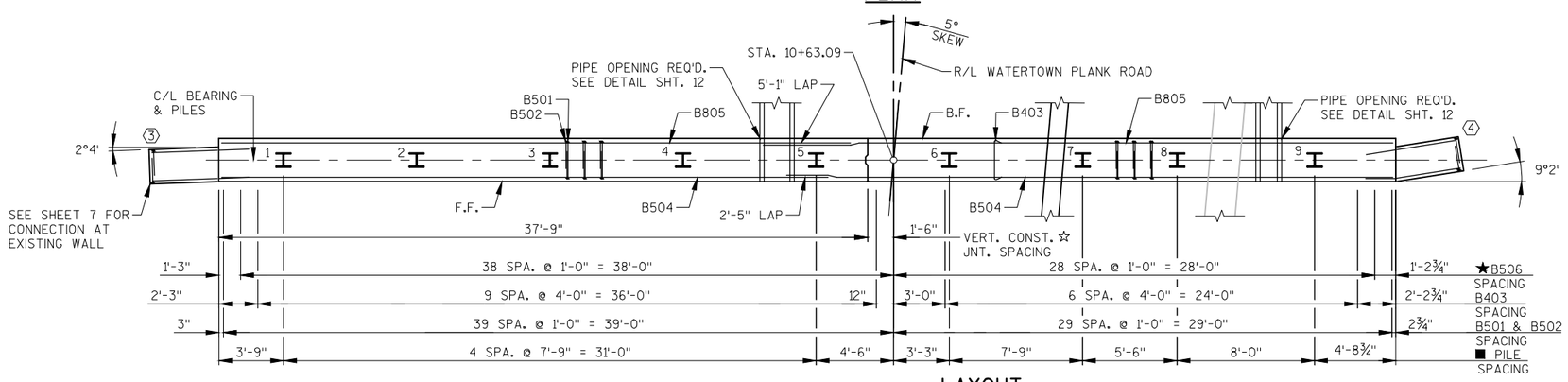

LAYOUT

LEGEND

- ◑ KEYED CONSTRUCTION JOINT FORMED BY SURFACED & BEVELED 2x6.
- ◪ VERTICAL 18" RUBBERIZED MEMBRANE WATERPROOFING EXTEND FROM 9" BELOW BRIDGE SEAT TO 1" BELOW TOP OF WINGS.
- ⬢ 18" RUBBERIZED MEMBRANE WATERPROOFING. (HORIZONTAL)
- ▲ ½" FILLER EXTEND AS SHOWN. SEAL ALL EXPOSED HORIZ. & VERT. SURFACES OF FILLER WITH NON-STAINING GRAY, NON-BITUMINUOS JOINT SEALER. (1" DEEP & HOLD ⅛" BELOW SURFACE OF CONCRETE)
- ◭ ¾" x 4" PREFORMED FILLER, EXTEND FULL LENGTH OF ABUTMENTS BETWEEN EDGES OF SLAB.
- ★ B506 BARS MAY BE PLACED AFTER CONCRETE IS POURED BUT BEFORE IT HAS TAKEN ITS INITIAL SET. EMBED BAR 1'-0".
- ■ PILE SPACING MEASURED AT BASE OF SHAFT.
- ⊖ 2" DIAMETER (NON-METALIC) WEEP HOLE AT 20'-0" SPA. USE FILTER CLOTH W/ SELECT GRANULAR MATERIAL AT EACH HOLE ON B.F. (12"x12"x12" MIN.) COST INCIDENTAL TO "CONCRETE MASONRY BRIDGES".
- ☆ VERTICAL CONSTRUCTION JOINT. KEYWAY FORMED BY BEVELED 2x8. SEE SHEET 12 FOR ALTERNATE CONSTRUCTION JOINT DETAILS.

NOTES

SOME BARS HAVE BEEN OMITTED FOR CLARITY. SEE SHEET 7 FOR BILL OF BARS.

DO NOT PLACE FILL HIGHER THAN 3 FEET FROM BOTTOM OF ABUTMENT UNTIL SUPERSTRUCTURE IS IN PLACE.

SPACE REINFORCEMENT TO MISS PILING

F.F. – FRONT FACE

B.F. – BACK FACE

NO.	DATE	REVISION	BY

STRUCTURE B-67-0367

DRAWN BY RBH | PLANS CK'D. PTB

EAST ABUTMENT

SHEET 6 OF 15

8

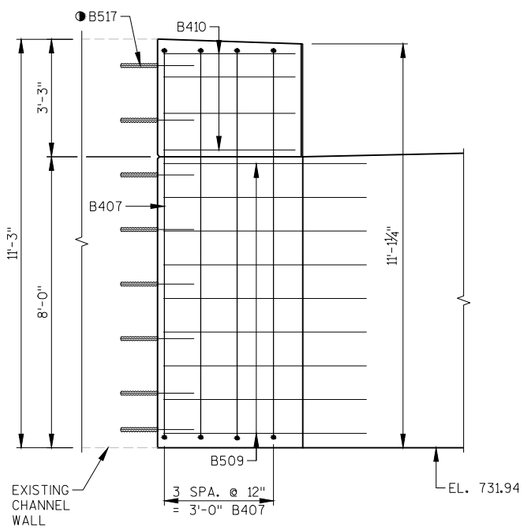

F.F. ELEVATION - WING 3

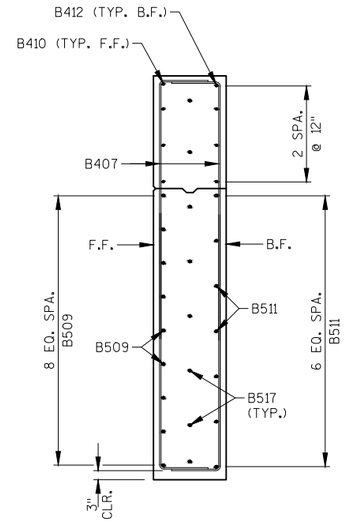

SECTION A-A

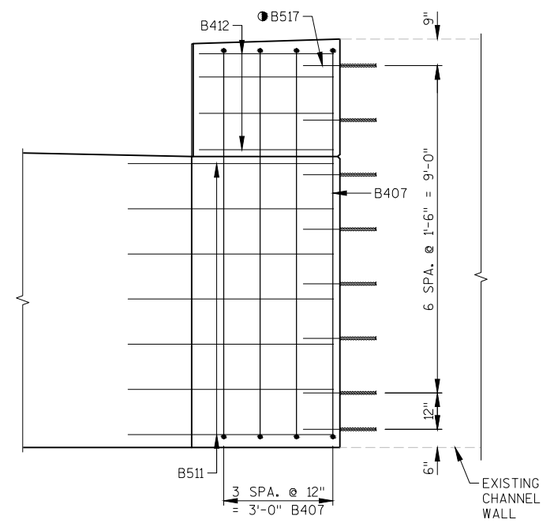

B.F. ELEVATION - WING 3

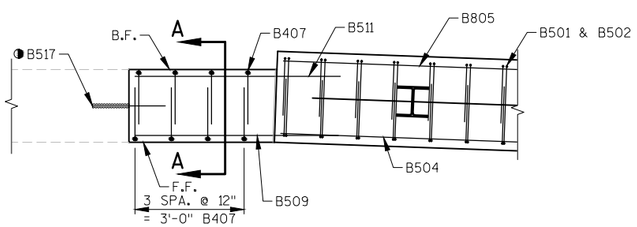

PLAN VIEW - WING 3

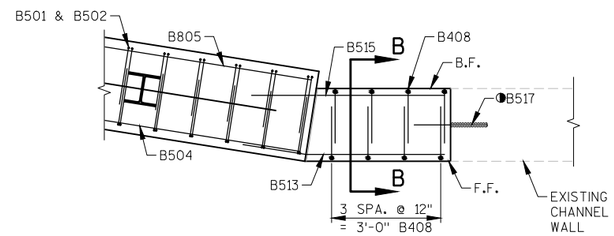

PLAN VIEW - WING 4

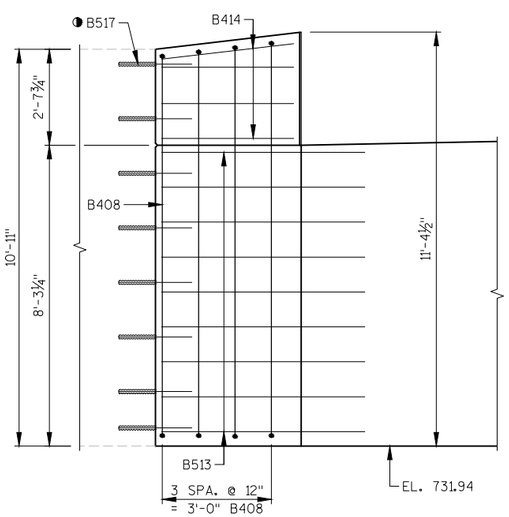

F.F. ELEVATION - WING 4

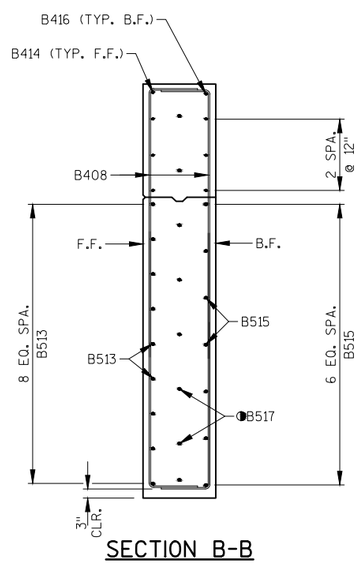

SECTION B-B

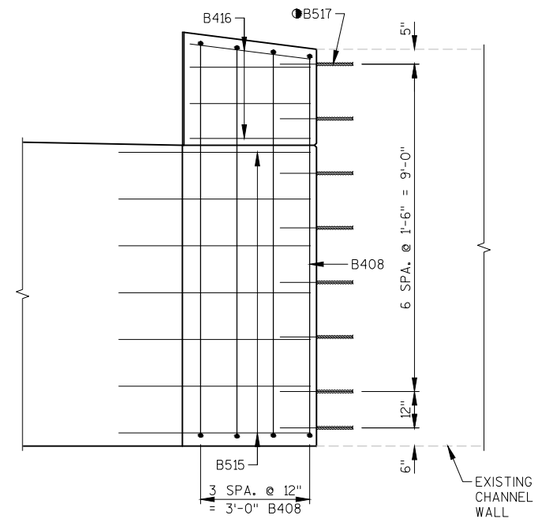

B.F. ELEVATION - WING 4

BILL OF BARS
EAST ABUTMENT

400 LB (COATED)
4,620 LB (UNCOATED)

BAR MARK	NO. REQ'D.	LENGTH	BENT	COAT	BAR SERIES	LOCATION
B501	138	9-0	X			BODY - VERT. - F.F. & B.F.
B502	69	9-3	X			BODY - VERT. - TOP
B403	51	2-8	X			TIE BARS
B504	18	35-4				BODY - HORIZ. - F.F.
B805	18	36-8				BODY - HORIZ. - B.F.
B506	67	2-0				BODY - VERT. - DOWELS
B407	8	13-2	X	X		WING 3 - VERT. - F.F. & B.F.
B408	8	13-5	X	X	*	WING 4 - VERT. - F.F. & B.F.
B509	9	5-7		X		WING 3 - HORIZ. - F.F. - BOTTOM
B410	4	3-7		X		WING 3 - HORIZ. - F.F. - TOP
B511	7	5-8		X		WING 3 - HORIZ. - B.F. - BOTTOM
B412	4	3-8		X		WING 3 - HORIZ. - B.F. - TOP
B513	9	5-7	X	X		WING 4 - HORIZ. - F.F. - BOTTOM
B414	4	3-8		X		WING 4 - HORIZ. - F.F. - TOP
B515	7	5-4		X		WING 4 - HORIZ. - B.F. - BOTTOM
B416	4	3-3		X		WING 4 - HORIZ. - B.F. - TOP
◑ B517	16	2-0		X		WINGS 3 & 4 - TIE BARS AT EXISTING WALL

NOTES

SOME BARS HAVE BEEN OMITTED FOR CLARITY. SEE THIS SHEET FOR BILL OF BARS.

◑ DRILL BARS INTO EXISTING CONCRETE WALL (CONCRETE MASONRY ANCHOR NOT REQ'D). DRILLING INCIDENTAL TO BID ITEM "CONCRETE MASONRY STRUCTURES".

THE FIRST DIGIT OF A BAR MARK SIGNIFIES THE BAR SIZE.

DIMENSIONS IN BENDING DETAILS ARE OUT TO OUT OF BAR.

* LENGTH SHOWN IS AN AVERAGE LENGTH ONLY. SEE BAR SERIES TABLE FOR ACTUAL LENGTHS.

BAR SERIES TABLE

BAR MARK	NO. REQ'D.	LENGTH
B408	2 SERIES OF 4	13-0 TO 13-10

BUNDLE AND TAG EACH SERIES SEPARATELY.

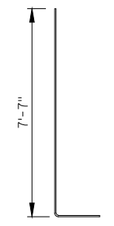

B501

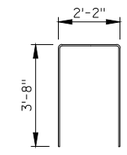

B502

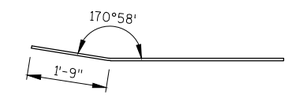

B513

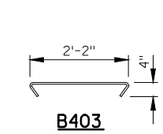

B403

B407 & B408

NO.	DATE	REVISION	BY

STATE OF WISCONSIN
DEPARTMENT OF TRANSPORTATION

STRUCTURE B-67-0367

DRAWN BY RBH PLANS CK'D. PTB

EAST ABUTMENT DETAILS

SHEET 7 OF 15

8

8

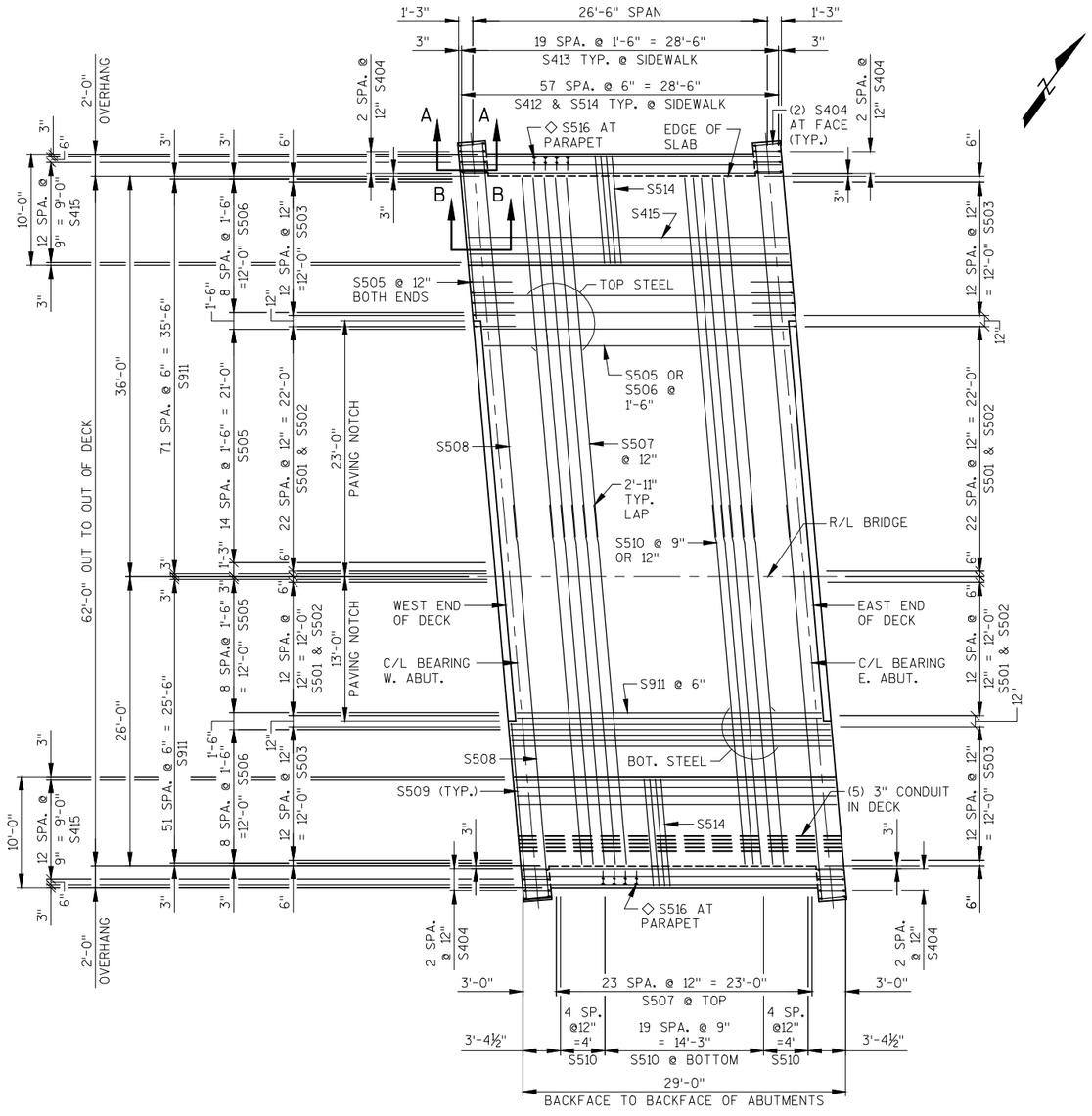

PLAN

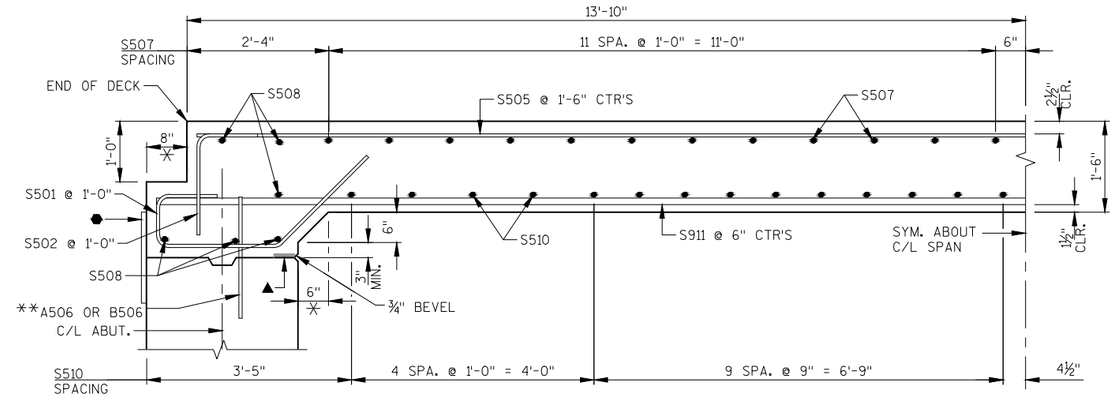

PARTIAL LONGITUDINAL SECTION THROUGH ROADWAY

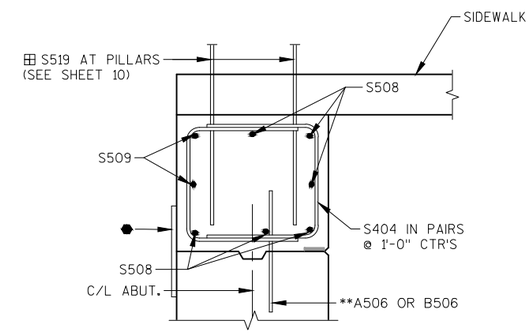

SECTION A-A

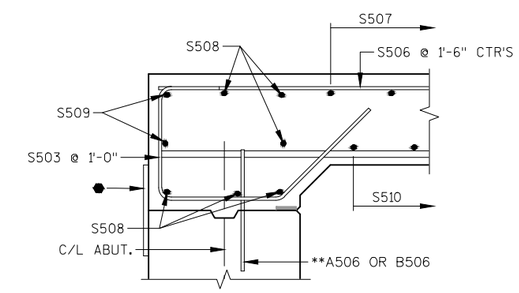

SECTION B-B

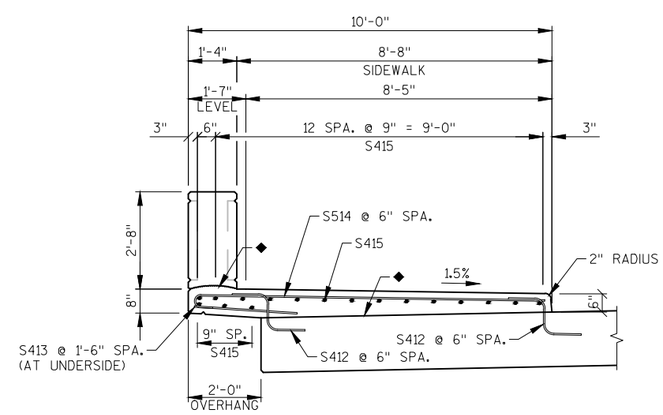

SECTION THROUGH RAISED SIDEWALK

LEGEND

- ⬢ 18" RUBBERIZED MEMBRANE WATERPROOFING. (HORIZONTAL)
- ▲ ¾" × 4" PREFORMED FILLER, EXTEND FULL LENGTH OF ABUTMENTS BETWEEN EDGES OF SLAB.
- ◆ CONSTRUCTION JOINT - STRIKE OFF AS SHOWN AND LEAVE ROUGH. FOR SLAB PLACEMENT, MATCH BRIDGE CROSS SLOPE.
- ⊞ S519 BARS ARE REQ'D. AT PILLARS. BARS MAY BE PLACED AFTER DECK CONCRETE IS POURED BUT BEFORE INITIAL SET HAS TAKEN PLACE. USE CARE TO PLACE S519 BARS CORRECTLY.
- ◇ S516 BARS TO BE TIED TO SIDEWALK STEEL BEFORE SIDEWALK IS POURED. SEE SHEET 10 FOR BAR LAYOUT.
- * DIMENSION IS NORMAL TO THE C/L OF SUBSTRUCTURE UNITS.
- ** SEE SHEETS 4 OR 6 FOR PLACEMENT OF A506 OR B506 BARS.

NOTES

SEE SHEET 9 FOR SUPERSTRUCTURE GENERAL NOTES AND BAR STEEL DETAILS.

NO.	DATE	REVISION	BY

STRUCTURE B-67-0367

DRAWN BY RBH | PLANS CK'D. PTB

SUPERSTRUCTURE

SHEET 8 OF 15

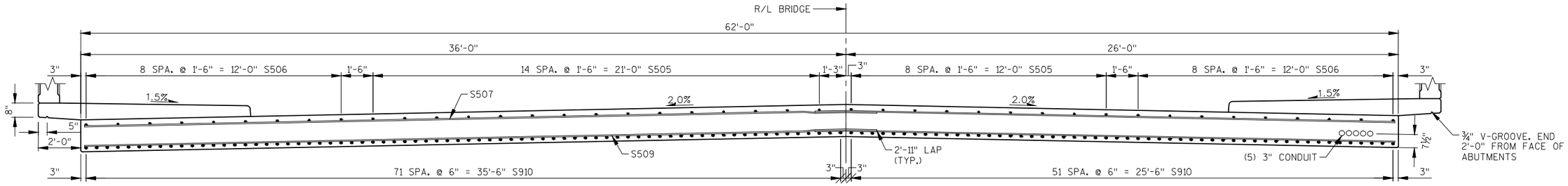

TRANSVERSE SECTION WITHIN SPAN

(LOOKING EAST)

NOTES

SUPPORT ALTERNATE TOP TRANSVERSE BARS IN SLAB BY INDIVIDUAL BAR CHAIRS AT APPROX. 3'-0" CENTERS. SUPPORT BOTTOM LONGITUDINAL BARS BY CONTINUOUS BAR CHAIRS AT APPROX. 4'-0" CENTERS.

PLACE TRANSVERSE BARS PARALLEL TO THE CENTERLINE OF SUBSTRUCTURE UNITS.

PARAPETS, AND SIDEWALKS PLACED ON TOP OF SLAB SHALL BE POURED AFTER FALSEWORK HAS BEEN RELEASED.

THE SLAB THICKNESS DIMENSION IS MINIMUM. ANY TOLERANCES NECESSARY TO CORRECT CONSTRUCTION DISCREPANCIES ARE TO BE PLUS (+).

LEGEND

- ⬢ 18" RUBBERIZED MEMBRANE WATERPROOFING. (HORIZONTAL)
- ▲ ¾" × 4" PREFORMED FILLER, EXTEND FULL LENGTH OF ABUTMENTS BETWEEN EDGES OF SLAB.
- * DIMENSION IS NORMAL TO THE C/L OF SUBSTRUCTURE UNITS.
- ** SEE SHEETS 4 AND 6 FOR PLACEMENT OF A506 OR B506 BARS.

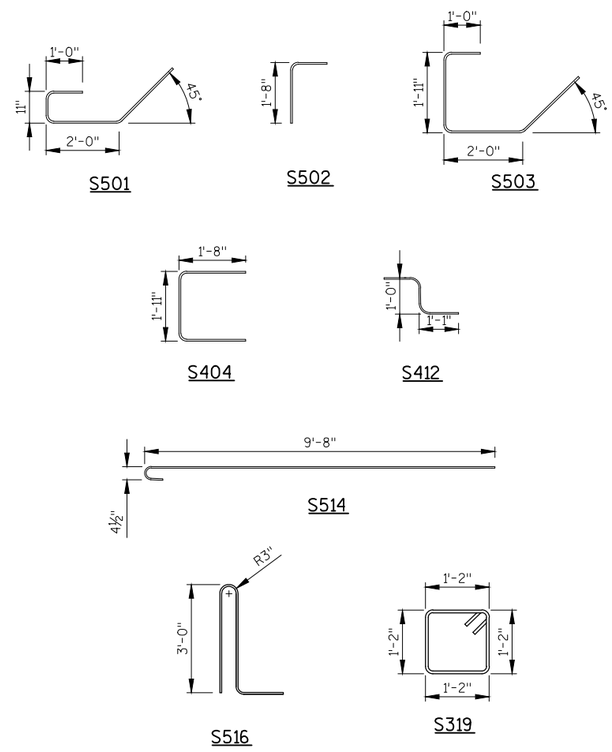

BILL OF BARS SUPERSTRUCTURE

22,390 LB (COATED)

BAR MARK	NO. REQ'D.	LENGTH	BENT	COAT	LOCATION
S501	72	5-10	X	X	END OF DECK AT PAVING NOTCH
S502	72	2-7	X	X	END OF DECK AT PAVING NOTCH
S503	52	6-10	X	X	END OF DECK
S404	32	5-1	X	X	END OF DECK AT CORNERS
S505	24	27-4		X	SLAB - TOP - LONG. AT PAVING NOTCH
S506	18	28-8		X	SLAB - TOP - LONG.
S507	48	32-5		X	SLAB - TOP - TRANS. - IN SPAN
S508	24	35-7		X	SLAB - TOP - TRANS. - OVER ABUT.
S509	12	15-8		X	SLAB - TOP - TRANS. - AT CORNER
S510	56	32-5		X	SLAB - BOTTOM - TRANS.
S911	124	28-8		X	SLAB - BOTTOM - LONGIT.
S412	232	2-10	X	X	SLAB & SDWK. - TRANS. - VERT.
S413	40	2-10		X	SDWK. - TRANS. - BOTTOM
S514	116	10-3	X	X	SDWK. - TRANS. - TOP
S415	34	28-8		X	SDWK. - LONGIT. - HORIZ.
S516	72	7-6	X	X	PARAPET - VERT.
S417	12	27-10		X	PARAPET - HORIZ.
S518	16	7-6		X	PILLARS - VERT.
S319	24	5-0	X	X	PILLARS - STIRRUPS

NOTES: THE FIRST DIGIT OF A BAR SIGNIFIES THE BAR SIZE.

DIMENSIONS IN BENDING DETAILS ARE OUT TO OUT OF BAR.

SOME BARS HAVE BEEN OMITTED FOR CLARITY.

TOP OF DECK ELEVATIONS

	C/L W. ABUT.	0.10 PNT.	0.20 PNT.	0.30 PNT.	0.40 PNT.	0.50 PNT.	0.60 PNT.	0.70 PNT.	0.80 PNT.	0.90 PNT.	C/L E. ABUT.
N. EDGE	742.01	742.02	742.04	742.06	742.08	742.11	742.13	742.16	742.19	742.22	742.26
C/L	742.75	742.77	742.79	742.81	742.83	742.86	742.89	742.92	742.95	742.98	743.02
S. EDGE	742.24	742.26	742.29	742.31	742.34	742.36	742.39	742.42	742.46	742.49	742.53

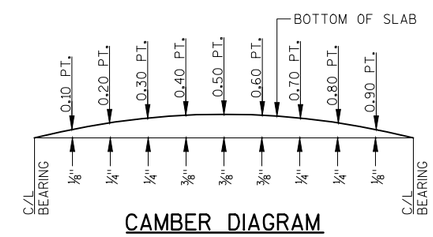

CAMBER DIAGRAM

CAMBER SPAN AS SHOWN TO PROVIDE FOR THEORETICAL DEADLOAD DEFLECTION AND FUTURE PLASTIC FLOW. CAMBER DOES NOT INCLUDE ALLOWANCE FOR FORM SETTLEMENT.

NO.	DATE	REVISION	BY

STRUCTURE B-67-0367

DRAWN BY RBH PLANS CK'D. PTB

SUPERSTRUCTURE DETAILS

SHEET 9 OF 15

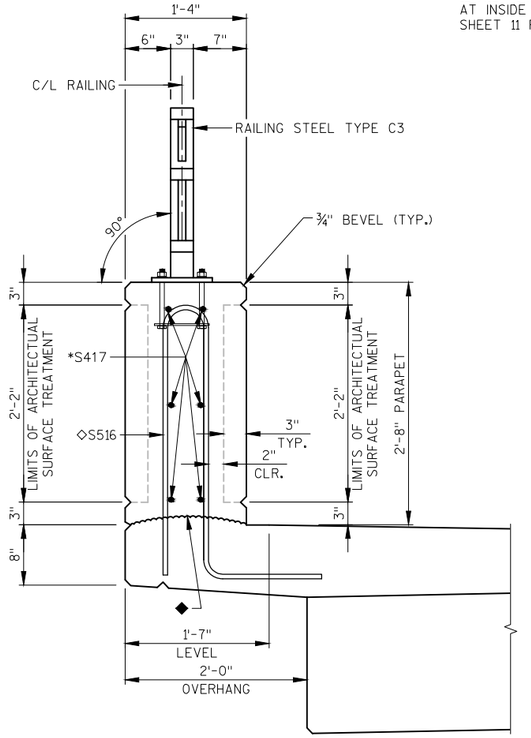

SECTION THROUGH PARAPET ON BRIDGE

*ADJUST LOCATION OF BARS TO ALLOW PLACEMENT OF ANCHOR ASSEMBLY FOR RAILING

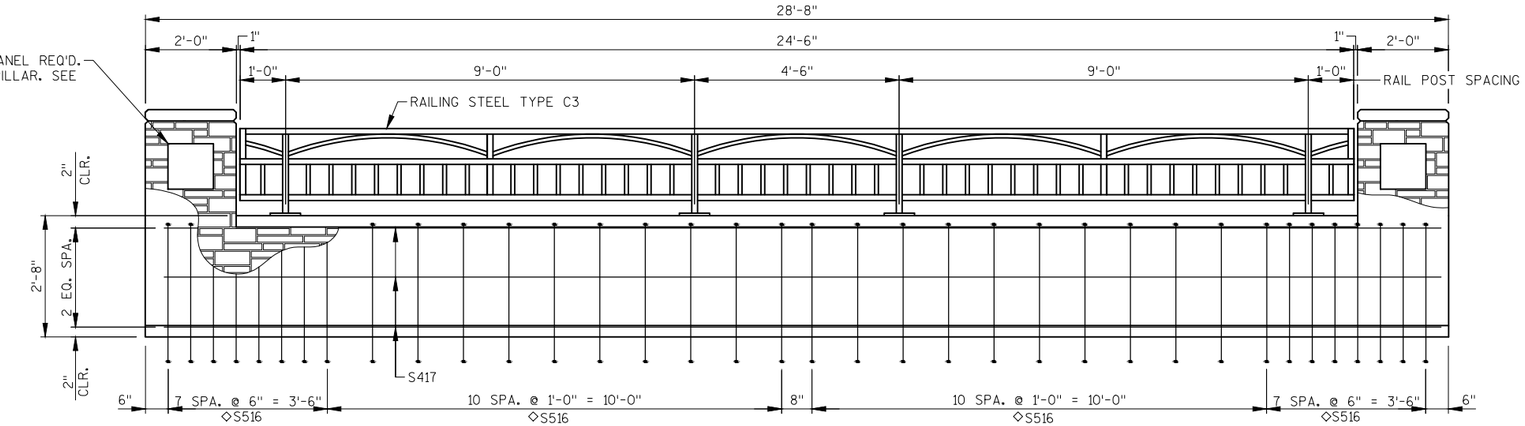

ELEVATION VIEW

NORTH PARAPET SHOWN, SOUTH PARAPET SIMILAR.

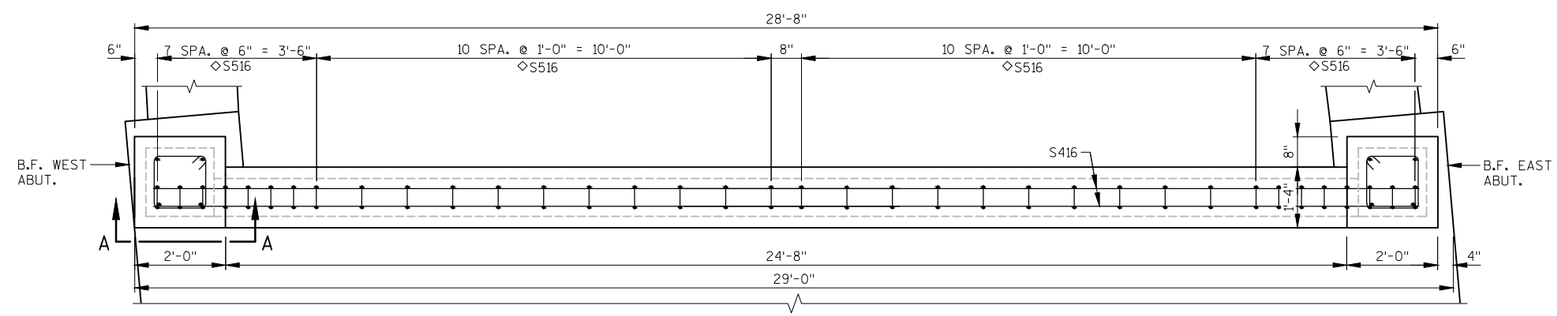

PLAN VIEW

NORTH PARAPET SHOWN, SOUTH PARAPET SIMILAR.

LEGEND

⊞ S519 BARS ARE REQ'D. AT PILLARS. BARS MAY BE PLACED AFTER DECK CONCRETE IS POURED BUT BEFORE INITIAL SET HAS TAKEN PLACE. USE CARE TO PLACE S519 BARS CORRECTLY.

◇ S516 BARS TO BE TIED TO SIDEWALK STEEL BEFORE SIDEWALK IS POURED.

◆ CONSTRUCTION JOINT - STRIKE OFF AS SHOWN AND LEAVE ROUGH.

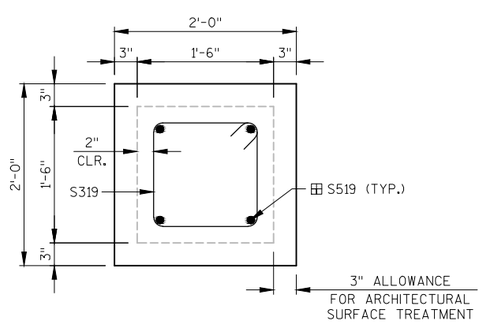

SECTION B-B

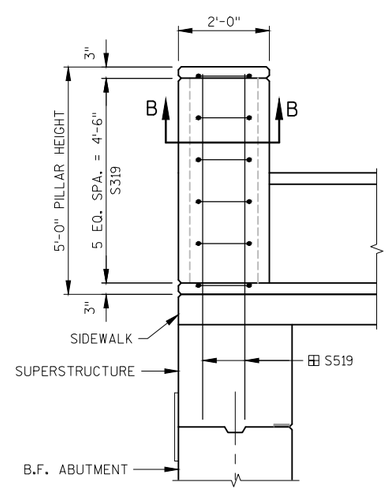

SECTION A - A

(SHOWING BAR STEEL)

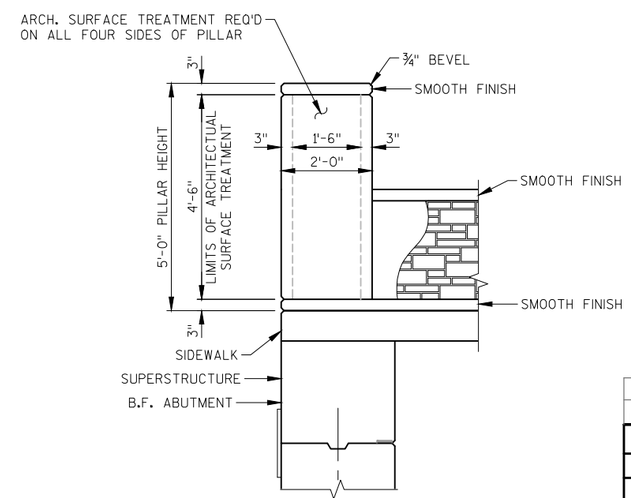

SECTION A - A

(SHOWING ARCHITECTURAL SURFACE TREATMENT)

NO.	DATE	REVISION	BY

STRUCTURE B-67-0367

DRAWN BY RBH | PLANS CK'D. PTB

RAILING LAYOUT – PARAPET DETAILS

SHEET 10 OF 15

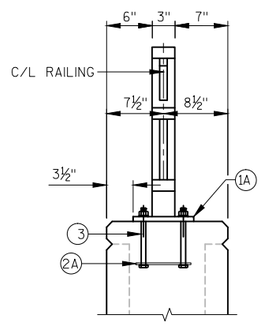

SECTION VIEW

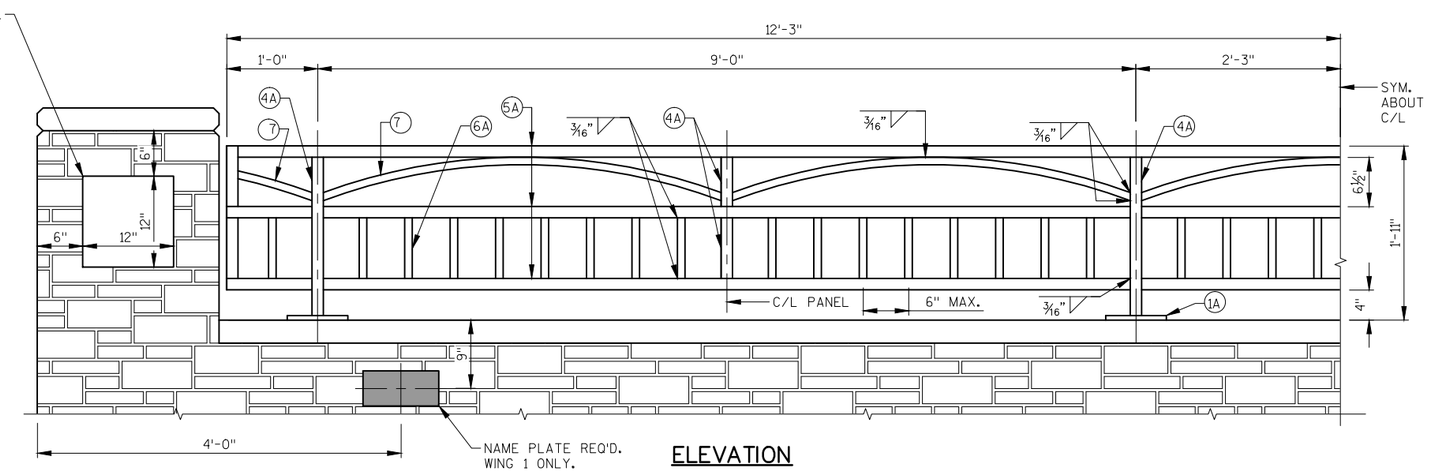

ELEVATION

LEGEND

(1A) PLATE ⅝" × 6" × 8" WITH ¾" × 1½" SLOTTED HOLES.

(2A) ¼" × 5" × 7" ANCHOR PLATE WITH 11/16" DIA. HOLES FOR ANCHOR BOLTS NO. 3.

(3) ⅝" DIA. × 9" LONG TYPE 316 STAINLESS STEEL THREADED RODS (MIN. TENSILE STRENGTH = 70 KSI) WITH NUT AND WASHERS OF SAME ALLOY GROUP.

(4A) STRUCTURAL TUBING 3" × 1½" × 3/16". PLACE VERTICAL. WELD TO NO. 1 & 5.

(5A) STRUCTURAL TUBING 3" × 1½" × 3/16" RAILS. WELD TO NO. 1 & NO. 4. INSIDE OF TUBE TO BE PAINTED AT ALL FIELD ERECTION & EXPANSION JOINTS.

(6A) BAR 1" × 1" PICKETS. WELD TO NO. 5. SPACE AT 6" (MAX. C/L TO C/L SPACING). PLACE VERTICAL.

(7) BAR 1" × 1". BEND TO REQUIRED RADIUS. WELD TO NO. 4 & 5.

(9A) RECTANGULAR SLEEVE FABRICATED FROM 3/16" PLATES. PROVIDE "SLIDING FIT".

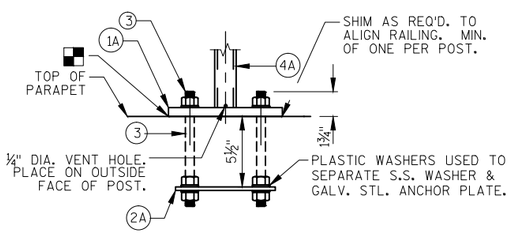

ANCHOR BOLTS FOR RAIL POSTS

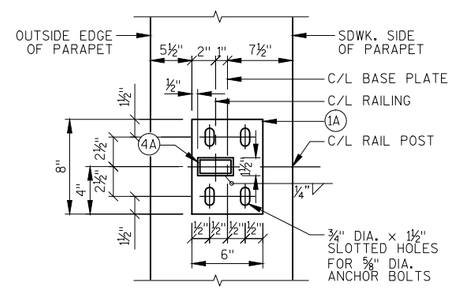

TYPICAL RAIL POST BASE PLATE

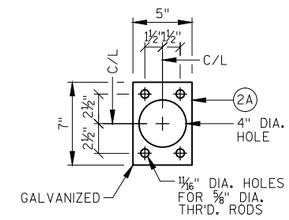

ANCHOR PLATE

NOTES

BID ITEM SHALL BE "RAILING STEEL TYPE C3 B-67-0367", WHICH SHALL INCLUDE ALL STEEL ITEMS SHOWN AND PAINTING.

POST BASE PLATES SHALL BE FLAT WITH ALL SURFACES SMOOTH AND FREE FROM WARP AND ALL EDGES SMOOTH, STRAIGHT AND VERTICAL. ALL PLATE CUTS SHALL BE MACHINE OR MACHINE FLAME CUTS.

ALL PLATES, BARS, AND RECTANGULAR SLEEVES SHALL CONFORM TO ASTM A709 GRADE 36, ALL STRUCTURAL TUBING SHALL CONFORM TO ASTM A500 GRADE B.

ANCHORAGES SHALL BE ACCURATELY PLACED TO PROVIDE CORRECT ALIGNMENT OF RAILING. SET NORMAL TO GRADE.

CUT BOTTOM OF POST TO MAKE POST VERTICAL IN BOTH TRANSVERSE AND LONGITUDINAL DIRECTION.

STEEL SHIMS SHALL BE PROVIDED & USED UNDER BASE PLATES WHERE REQUIRED FOR ALIGNMENT AND SHALL BE GALVANIZED.

CAULK AROUND PERIMETER OF BASE PLATES, NO. 1, AND FILL BOLT SLOT OPENINGS IN SHIMS AND BASE PLATES WITH NON-STAINING GRAY NON-BITUMINOUS JOINT SEALER.

ALL MATERIAL (EXCEPT NO. 2 & 3) SHALL BE GALVANIZED AFTER FABRICATION. PRIOR TO GALVANIZING, THE STEEL RAILING SHOULD BE GIVEN A NO. 6 BLAST CLEANING PER SSPC SPECIFICATIONS. PREPARE AND POWDERCOAT OVER GALVANIZED SURFACE AS SPECIFIED IN ASTM D7803. FINISHED SURFACE SHALL BE BLACK THERMOPLASTIC POWDERCOATING AS INDICATED IN THE PROJECT SPECIFICATIONS. VERIFY COLOR AND FINISH WITH FIELD ENGINEER.

VENT HOLES SHALL BE DRILLED IN TOP RAIL OVER RAIL POSTS AND AT LOW END OF OTHER RAILS AND IN POST MEMBERS TO FACILITATE GALVANIZING AND DRAINAGE.

RAILING SHALL BE FABRICATED FULL LENGTH.

TOUCH-UP PAINTING TO BE DONE AT COMPLETION OF STEEL RAILING INSTALLATION TO THE SATISFACTION OF THE ENGINEER AT NO EXTRA COST.

ALL JOINTS AND RECESSES IN CONCRETE PARAPET ARE TO BE VERTICAL.

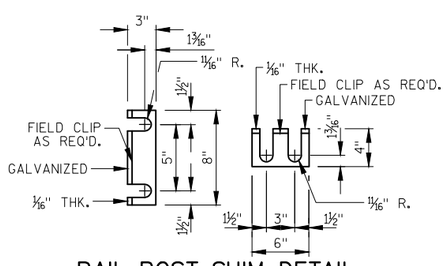

RAIL POST SHIM DETAIL
(2 SETS PER POST)

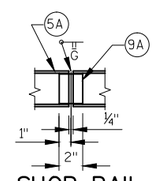

SHOP RAIL SPLICE DETAIL
(LOCATION MUST BE SHOWN ON SHOP DRAWINGS)

NO.	DATE	REVISION	BY

STRUCTURE B-67-0367

DRAWN BY RBH | PLANS CK'D. PTB

RAILING STEEL TYPE C3

SHEET 11 OF 15

8

8

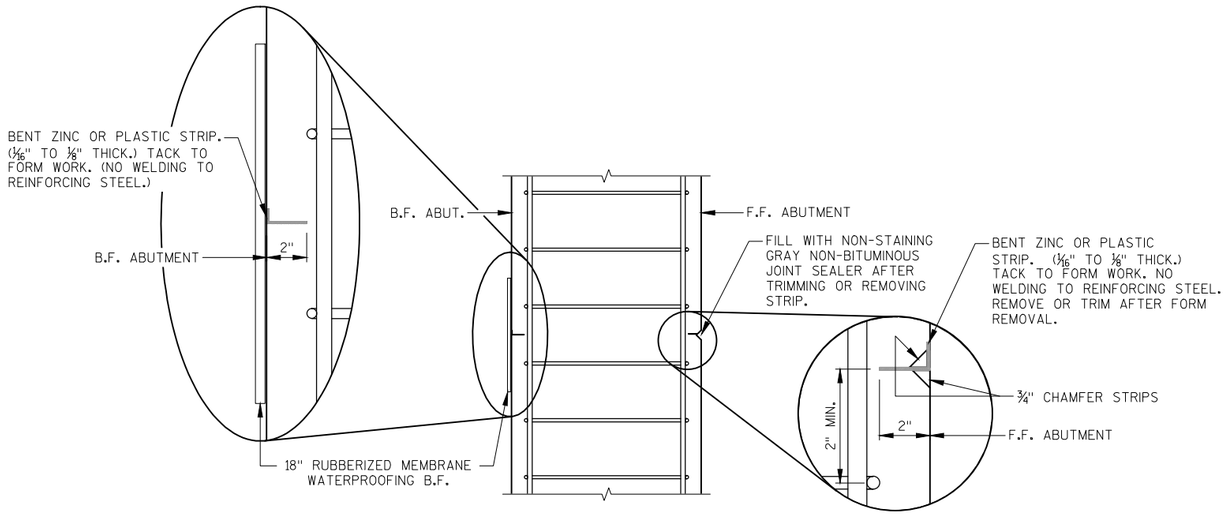

ALTERNATE CONSTRUCTION JOINT DETAIL

PLAN VIEW

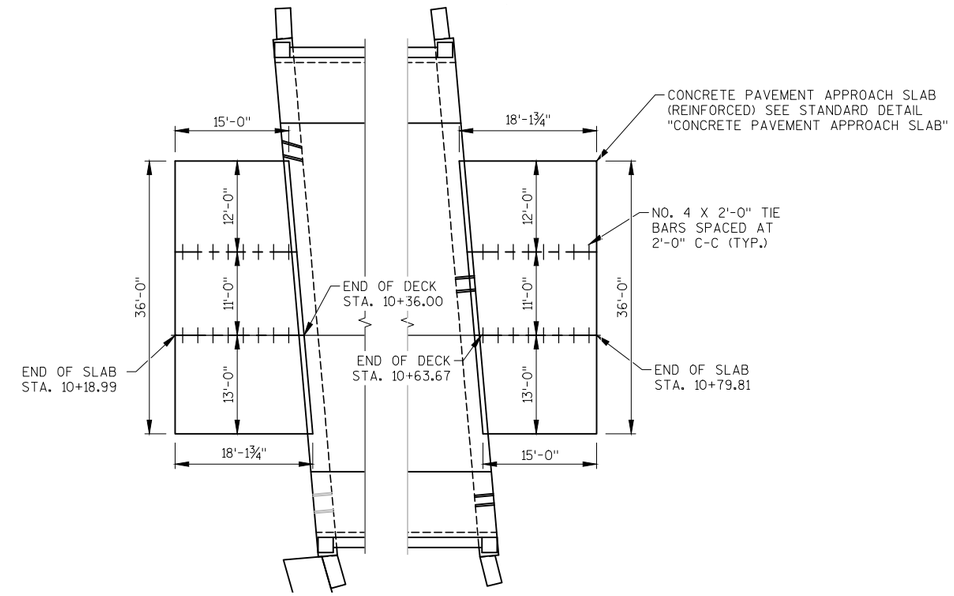

CONCRETE BRIDGE APPROACH DETAILS

BILL OF BARS MISCELLANEOUS

330 LB (COATED)
50 LB (UNCOATED)

BAR MARK	NO. REQ'D.	LENGTH	BENT	COAT	LOCATION
M401	24	1-10	X	X	CUT OFF WALL - DOWELL BAR
M402	1	23-3		X	CUT OFF WALL - HORIZ.
M403	8	3-0			PIPE OPENING - 12" - DIAGONAL
M804	12	2-6			PIPE OPENING - 12"
M405	16	3-8			PIPE OPENING - 18" - DIAGONAL
M806	24	3-0			PIPE OPENING - 18"
M507	27	20-8			SIGN BASE - HORIZ.
M508	18	9-1	X		SIGN BASE - VERT.

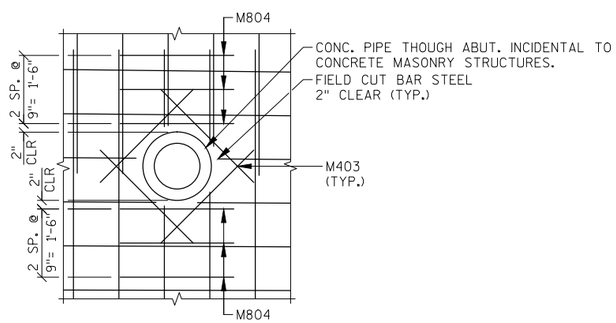

12" PIPE OPENING DETAIL

(PLACE STEEL AT F.F. AND B.F. OF ABUT.)
REQ'D. AT (1) LOCATION

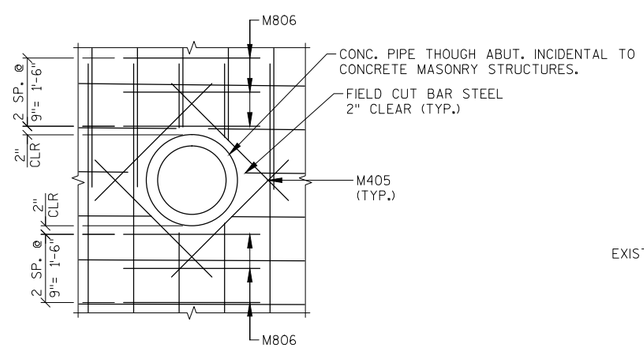

18" PIPE OPENING DETAIL

(PLACE STEEL AT F.F. AND B.F. OF ABUT.)
REQ'D. AT (2) LOCATIONS

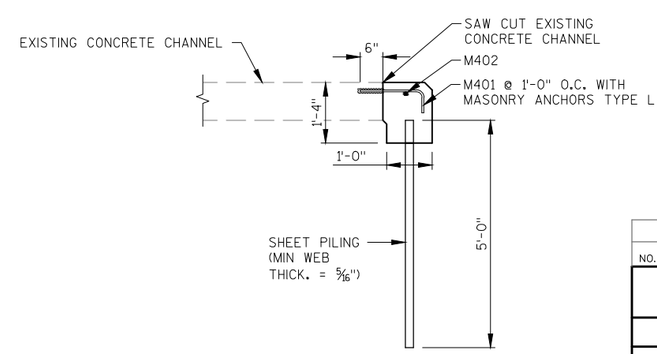

CUT-OFF WALL - UPSTREAM END

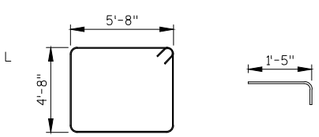

M507 M401

NO.	DATE	REVISION	BY

STATE OF WISCONSIN
DEPARTMENT OF TRANSPORTATION

STRUCTURE B-67-0367

DRAWN BY RBH PLANS CK'D. PTB

CONSTRUCTION DETAILS (1 OF 3)

SHEET 12 OF 15

8

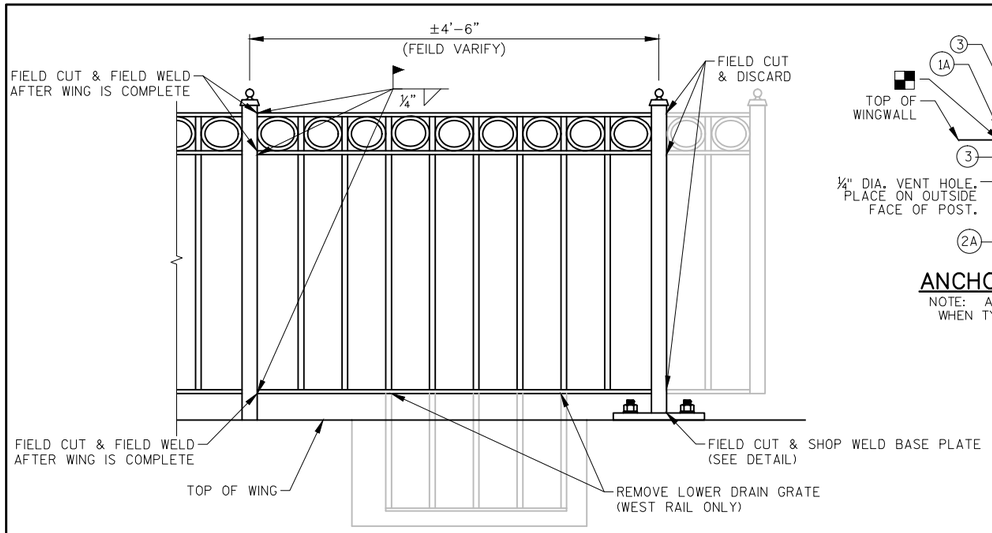

NORTH CHANNEL RAILING DETAIL

(WEST RAILING LOOKING EAST SHOWN WEST SIMILAR)

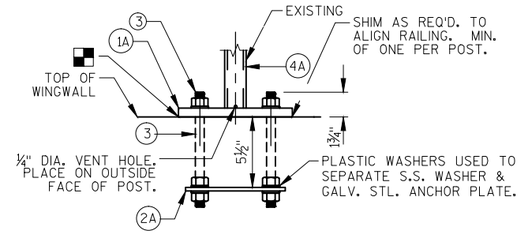

ANCHOR BOLTS DETAIL

NOTE: ANCHOR PLATE NOT REQUIRED WHEN TYPE S ANCHORS ARE USED.

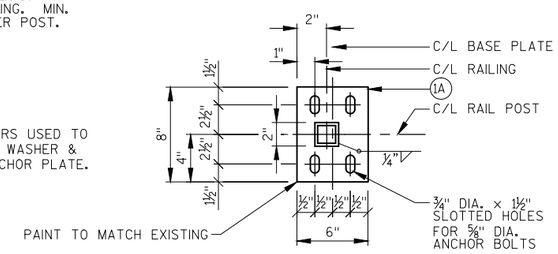

TYPICAL RAIL POST BASE PLATE

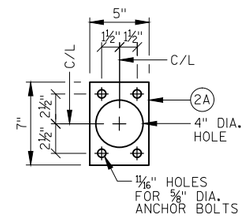

ANCHOR PLATE

LEGEND

(1A) PLATE ⅝" × 6" × 8" WITH ¾" × 1½" SLOTTED HOLES.

(1B) PLATE ⅝" × 8" × 10" WITH ¾" HOLES.

(2A) ¼" × 5" × 7" ANCHOR PLATE WITH 11/16" DIA. HOLES FOR ANCHOR BOLTS NO. 3.

(2B) ¼" × 6" × 10" ANCHOR PLATE WITH 11/16" DIA. HOLES FOR ANCHOR BOLTS NO. 3.

(3) ⅝" DIA. × 9" LONG TYPE 316 STAINLESS STEEL THREADED RODS (MIN. TENSILE STRENGTH = 70 KSI) WITH NUT AND WASHERS OF SAME ALLOY GROUP. (ALTERNATE RAIL POST ANCHORAGE - 4 EQUIV. STAINLESS STEEL CONCRETE MASONRY ANCHORS, TYPE S (EPOXY), ⅝" DIA., MIN. PULLOUT CAPACITY OF 15 KIPS. EMBED A MIN. OF 7" FOR RAIL POSTS.

(4) STRUCTURAL TUBING 4" × 4" × ¼". PLACE VERTICAL. WELD TO NO. 1B & EXISTING.

NOTES

BID ITEM SHALL BE "REMOVING, RETROFITTING, AND REINSTALLING RAILINGS", WHICH SHALL INCLUDE ALL STEEL ITEMS SHOWN, AND PAINTING.

POST BASE PLATES SHALL BE FLAT WITH ALL SURFACES SMOOTH AND FREE FROM WARP AND ALL EDGES SMOOTH, STRAIGHT AND VERTICAL. ALL PLATE CUTS SHALL BE MACHINE OR MACHINE FLAME CUTS.

ALL PLATES, BARS, AND RECTANGULAR SLEEVES SHALL CONFORM TO ASTM A709 GRADE 36, ALL STRUCTURAL TUBING SHALL CONFORM TO ASTM A500 GRADE B.

ANCHORAGES SHALL BE ACCURATELY PLACED TO PROVIDE CORRECT ALIGNMENT OF RAILING. SET NORMAL TO GRADE.

CUT BOTTOM OF POST TO MAKE POST VERTICAL IN BOTH TRANSVERSE AND LONGITUDINAL DIRECTION.

STEEL SHIMS SHALL BE PROVIDED & USED UNDER BASE PLATES WHERE REQUIRED FOR ALIGNMENT AND SHALL BE GALVANIZED.

CAULK AROUND PERIMETER OF BASE PLATES, NO. 1, AND FILL BOLT SLOT OPENINGS IN SHIMS AND BASE PLATES WITH NON-STAINING GRAY NON-BITUMINOUS JOINT SEALER.

ALL MATERIAL (EXCEPT NO. 2 & 3) SHALL BE GALVANIZED AFTER FABRICATION. PRIOR TO GALVANIZING, THE STEEL RAILING SHOULD BE GIVEN A NO. 6 BLAST CLEANING PER SSPC SPECIFICATIONS. PAINT OVER GALVANIZING WITH AN APPROVED TIE COAT AND TOP COAT AS INDICATED IN THE PROJECT SPECIFICATIONS.

VENT HOLES SHALL BE DRILLED IN TOP RAIL OVER RAIL POSTS AND AT LOW END OF OTHER RAILS AND IN POST MEMBERS TO FACILITATE GALVANIZING AND DRAINAGE.

TOUCH-UP PAINTING TO BE DONE AT COMPLETION OF STEEL RAILING INSTALLATION TO THE SATISFACTION OF THE ENGINEER AT NO EXTRA COST.

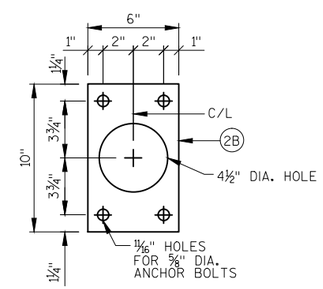

ANCHOR PLATE

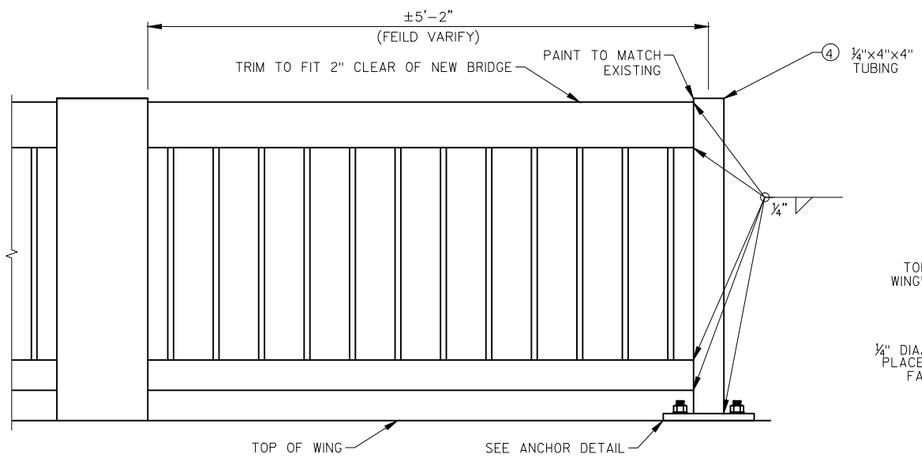

SOUTH CHANNEL RAILING DETAIL

(EAST RAILING LOOKING WEST SHOWN WEST SIMILAR)

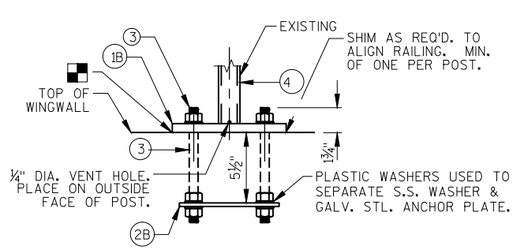

ANCHOR BOLTS DETAIL

NOTE: ANCHOR PLATE NOT REQUIRED WHEN TYPE S ANCHORS ARE USED.

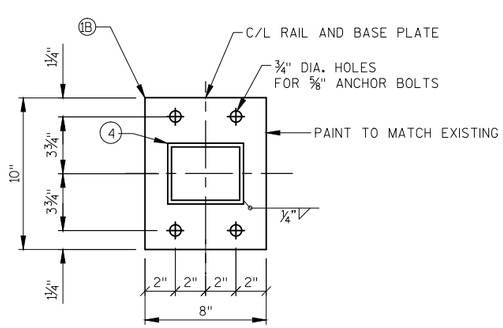

TYPICAL RAIL POST BASE PLATE

NO.	DATE	REVISION	BY

STRUCTURE B-67-0367

DRAWN BY RBH | PLANS CK'D. PTB

CONSTRUCTION DETAILS (2 OF 3)

SHEET 13 OF 15

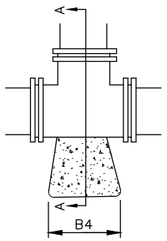

PLAN VIEW
TEE

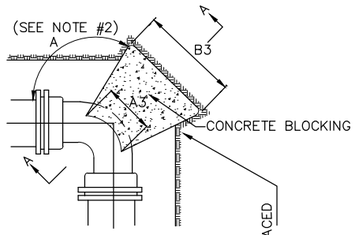

PLAN VIEW
PLAN 90 DEG. BEND

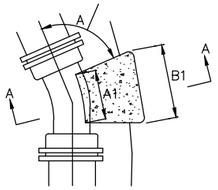

PLAN VIEW
22 1/2 DEG. BEND

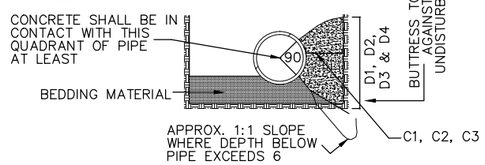

SECTION A-A

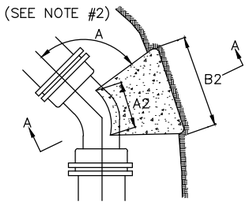

PLAN VIEW
45 DEG. BEND

BUTTRESS FOR BENDS

BUTTRESS DIMENSIONS								
PIPE	22 1/2° BENDS		45° BENDS		90° BENDS		TEES	
SIZE	B1	D1	B2	D2	B3	D3	B4	D4
6"	1'-0"	1'-0"	1'-0"	1'-0"	1'-4"	1'-2"	1'-3"	1'-0"
8"	1'-0"	1'-0"	1'-4"	1'-2"	1'-10"	1'-6"	1'-6"	1'-4"
10"	1'-2"	1'-2"	1'-7"	1'-6"	2'-4"	1'-10"	2'-3"	2'-0"
12"	1'-4"	1'-4"	1'-10"	1'-10"	2'-9"	2'-3"	2'-3"	2'-0"
16"	1'-10"	1'-8"	2'-6"	2'-4"	3'-10"	2'-10"	3'-2"	2'-6"
20"	2'-4"	2'-0"	3'-3"	2'-10"	6'-0"	3'-4"	4'-0"	3'-0"
24"	2'-10"	2'-4"	4'-0"	3'-3"	6'-4"	3'-10"	5'-3"	3'-4"
30"	3'-6"	3'-0"	5'-4"	3'-10"	8'-0"	4'-8"	6'-3"	4'-3"

NOTES

1. MECHANICAL JOINT RESTRAINT FITTINGS MAY BE USED IN LIEU OF THRUST BLOCKS. MECHANICAL JOINT RESTRAINT SHALL BE MEGALUG OR EQUAL.
2. DIMENSIONS IN TABLE ARE BASED ON A WATER PRESSURE OF AT LEAST 150 PSI, AND ON EARTH RESISTANCE OF 2 TONS PER SQ. FT.
3. DIMENSION C1, C2, C3, SHOULD BE LARGE ENOUGH TO MAKE ANGLE "A" EQUAL OR LARGER THAN 45 DEG.
4. DIMENSION A1, A2, A3, SHOULD BE AS LARGE AS POSSIBLE WITHOUT INTERFERRING WITH M.J. BOLTS.
5. SHAPE OF BACK OF BUTTRESS MAY VARY AS LONG AS POUR IS AGAINST FIRM UNDISTURBED EARTH.

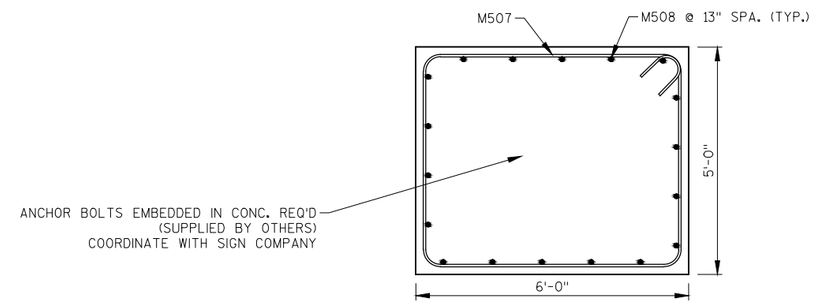

SIGN BASE PLAN VIEW

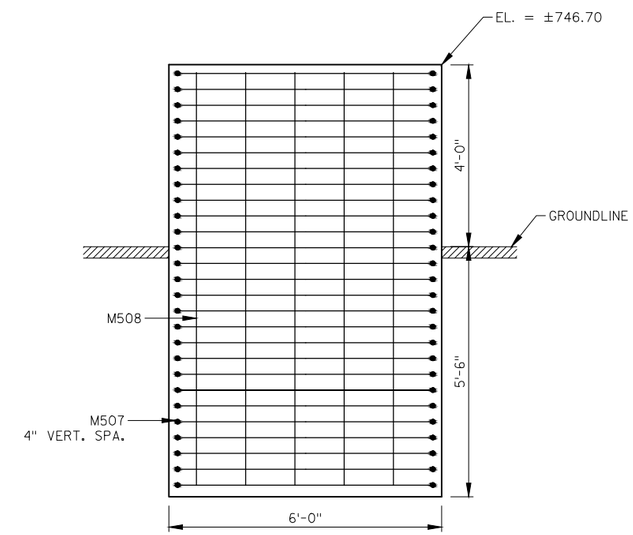

SIGN BASE ELEVATION VIEW

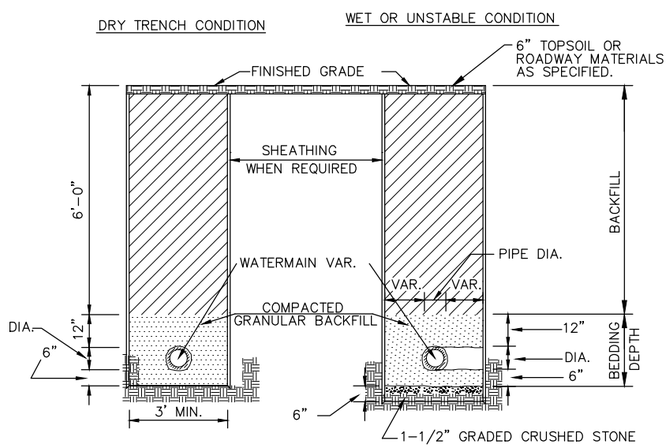

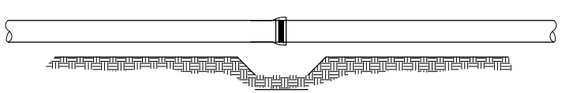

WATER MAIN TRENCH SECTION

NO.	DATE	REVISION	BY

STRUCTURE B-67-0367

DRAWN BY RBH PLANS CK'D. PTB

CONSTRUCTION DETAILS (3 OF 3)

SHEET 14 OF 15

8

8

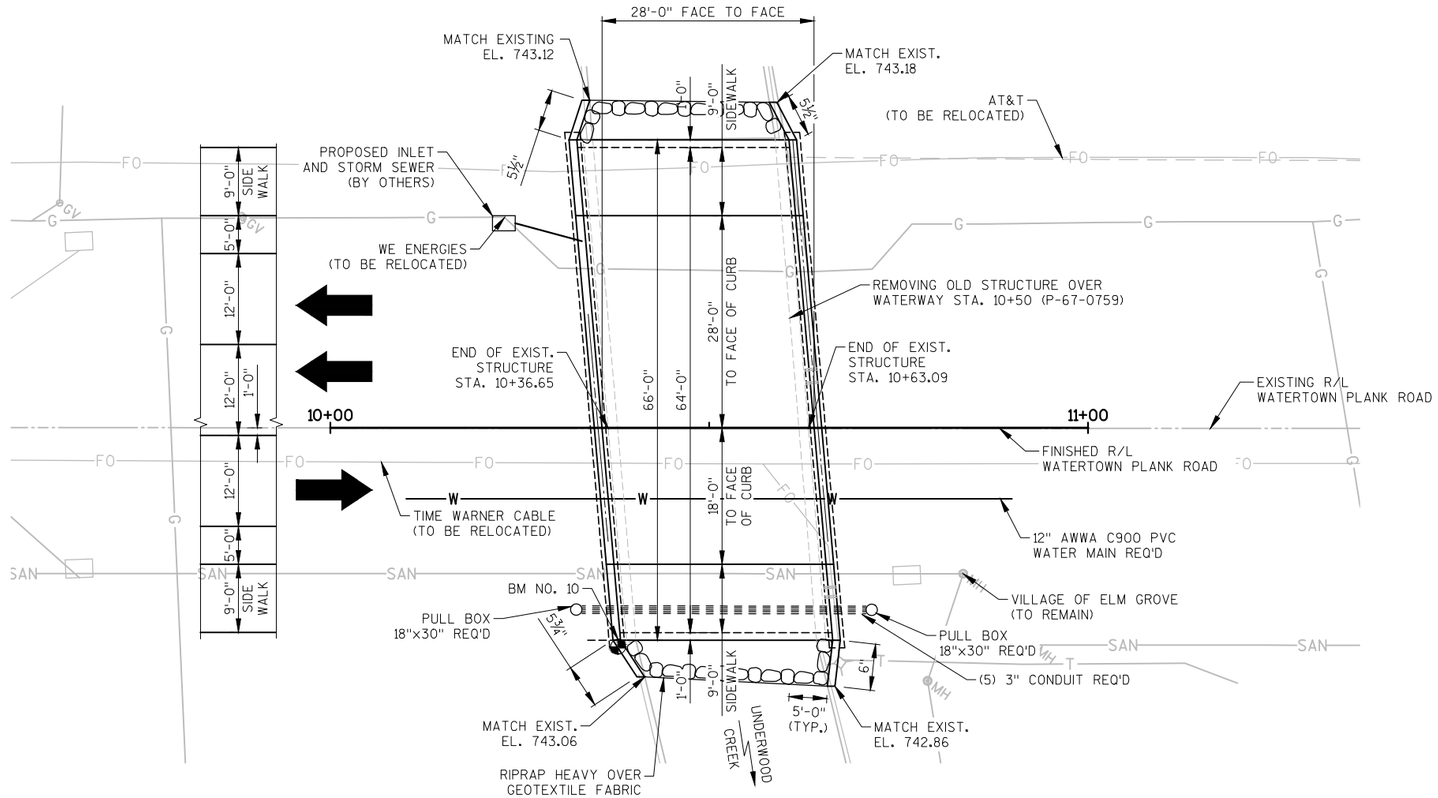

PLAN B-67-0367

(28' x 9' PRECAST STRUCTURE)

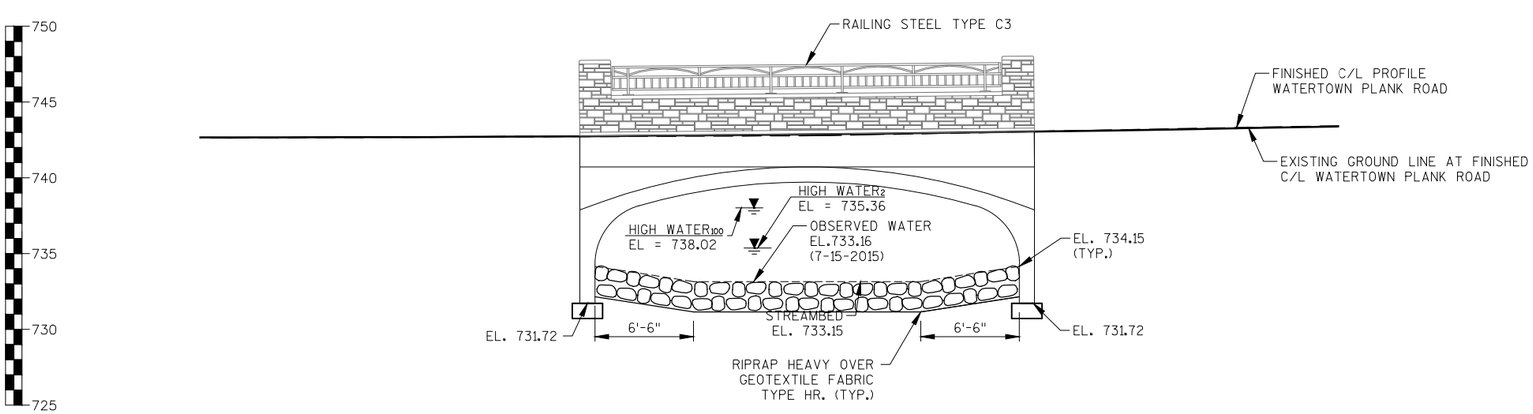

ELEVATION

(NORMAL TO UNDERWOOD CREEK)

DESIGN DATA

LIVE LOAD:

DESIGN LOADING HL-93

FOUNDATION DATA

BEARING CAPACITY ..... 3,000 P.S.F.

TRAFFIC DATA

A.D.T. (2016) 10,400
A.D.T. (2036) 15,460
DESIGN SPEED ..... 30 M.P.H.

HYDRAULIC DATA

100 YEAR FREQUENCY
- DRAINAGE AREA ..... 10.4 SQ. MI.
- Q_{100} TOTAL ..... 826 C.F.S.
  - THROUGH STRUCTURE ..... 826 C.F.S.
  - OVERTOPPING ROADWAY ..... 0 C.F.S.
- VELOCITY - THROUGH STRUCTURE ..... 6.12 F.P.S.
- WATERWAY AREA - THROUGH STRUCTURE ..... 135.0 SQ. FT.
- HIGH $WATER_{100}$ ELEVATION 738.02
- SCOUR CRITICAL CODE 5

EROSION CONTROL
- Q_2 ..... 154 C.F.S.
- HIGH $WATER_2$ ELEVATION 735.46

BENCH MARKS

NO.	STA.	DESCRIPTION	ELEV.
1	9+49	¾" IRON REBAR SET, 28.4' RT.	742.88
10	10+38	CHISLD SQ. IN CONC. SIGN BASE, 28.9' RT.	746.05
4	11+69	MAG NAIL SET, 45.6' LT.	745.38

NO.	DATE	REVISION	BY

STATE OF WISCONSIN
DEPARTMENT OF TRANSPORTATION

STRUCTURE B-67-0367

DRAWN BY RBH PLANS CK'D. PTB

PRECAST GENERAL PLAN

SHEET 15 OF 15

8

8

LEGEND

WORK ZONE

DETOUR ROUTE

Ⓐ M06-1 21"X21"

Ⓑ M06-1 21"X21"

Ⓒ M05-1L 21"X21"

Ⓓ M05-1R 21"X21"

Ⓔ END DETOUR M04-8A 24"X18"

Ⓕ DETOUR M04-8 24"X12"

Ⓖ DETOUR AHEAD W20-2-A

Ⓗ BRIDGE OUT XX MILES AHEAD R11-3-C 60"X24"

Ⓘ DETOUR M04-9R 30"X24"

Ⓙ DETOUR M04-9L 30"X24"

Ⓚ WATERTOWN PLANK ROAD R11-3-C 60"X24" (MOD)

SIGN ON PERMANENT SUPPORT

* SIGN READS "BRIDGE OUT .3 MILES AHEAD"

** SIGN READS "BRIDGE OUT .25 MILES AHEAD"

GENERAL NOTES:

THE EXACT LOCATION AND SPACING OF ALL SIGNS AND DEVICES SHALL BE ADJUSTED TO FIT FIELD CONDITIONS AS APPROVED BY THE ENGINEER.

ALL SIGNS INAPPROPRIATE TO THE STATUS OF THE CONTROL ZONE, INCLUDING PRE-EXISTING SIGNING IN THE VICINITY, SHALL BE COVERED OR REMOVED AS SPECIFIED IN THE PLANS AND/OR THE SPECIAL PROVISIONS OR AS DIRECTED BY THE ENGINEER.

"WO" AND "MO" SERIES SIGNS ARE THE SAME AS "W" AND "M" SIGNS EXCEPT THE BACKGROUND IS ORANGE.

ANY STOP SIGNS WHICH ARE REMOVED FOR A CONSTRUCTION OPERATION SHALL BE IMMEDIATELY RE-ESTABLISHED.

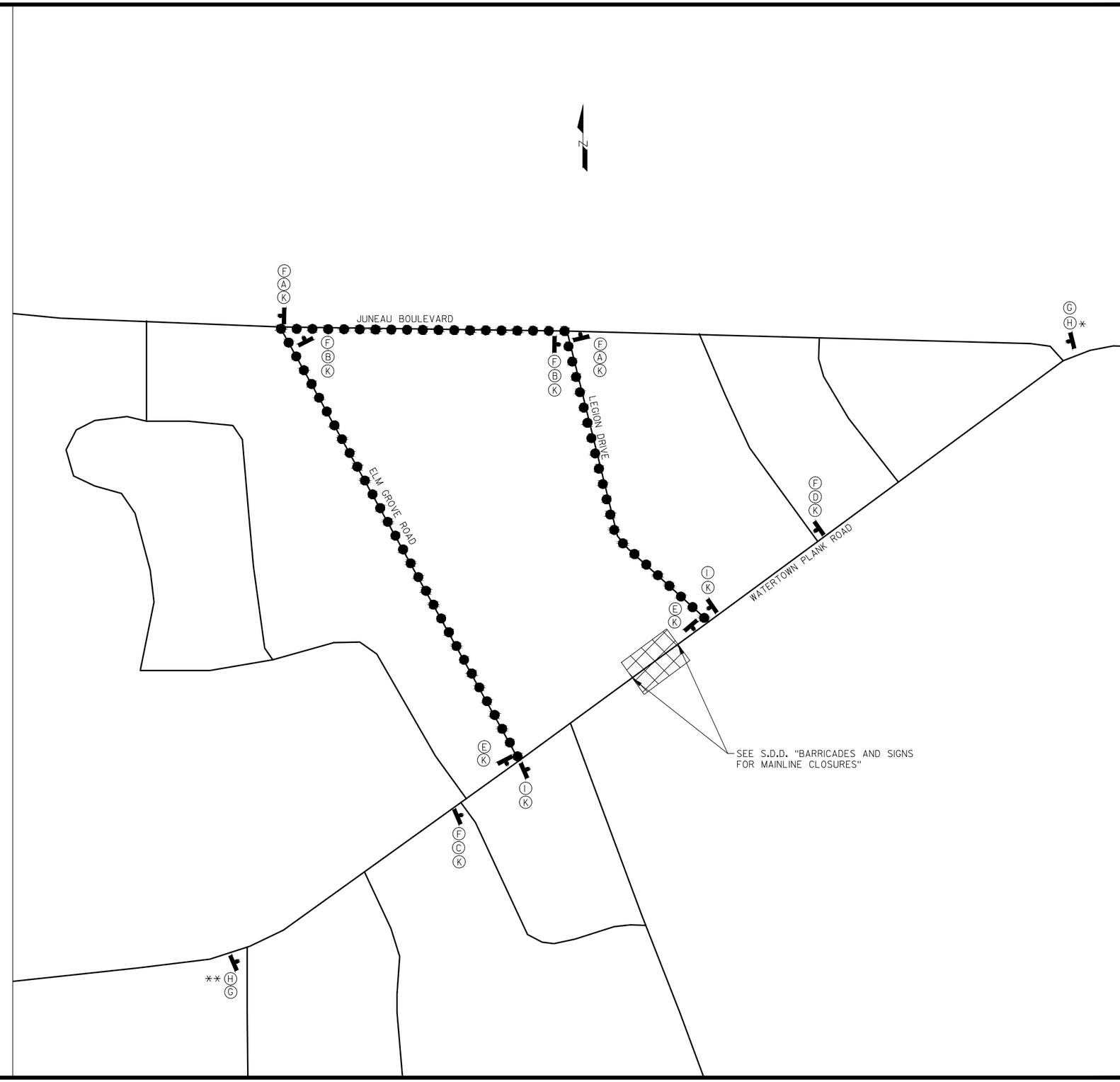

JEWELL associates engineers, inc.
Engineers - Surveyors - Architects

560 Sunrise Drive
Spring Green, WI 53588
phone: 608-588-7484
fax: 608-588-9322

THIS DOCUMENT, THE IDEAS AND DESIGNS INCORPORATED HEREIN AS AN INSTRUMENT OF SERVICE, IS THE PROPERTY OF JEWELL ASSOCIATES ENGINEERS, INC. AND IS NOT TO BE USED IN WHOLE OR IN PART WITHOUT PRIOR WRITTEN AUTHORIZATION OF JEWELL ASSOCIATES ENGINEERS, INC.

Watertown Plank Road Bridge
Elm Grove, Wisconsin

Date
11/17/2015

Date	Revision
-	-
-	-

Drawing Name
Traffic Detour Plan

Sheet No.
C3.0

Jewell Project Number
E33010

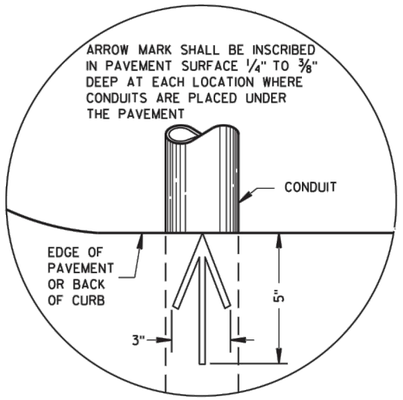

PLAN VIEW
ARROW MARK

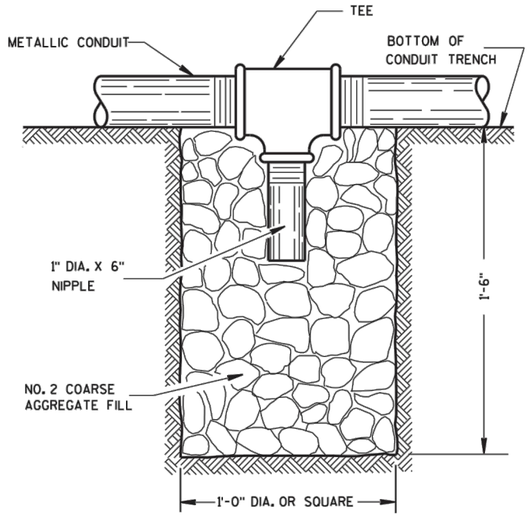

NOTE: INSTALL AT LOCATIONS WHERE METALLIC CONDUITS CANNOT BE PITCHED TO DRAIN INTO A PULL BOX.

DRAIN SUMP FOR METALLIC CONDUIT

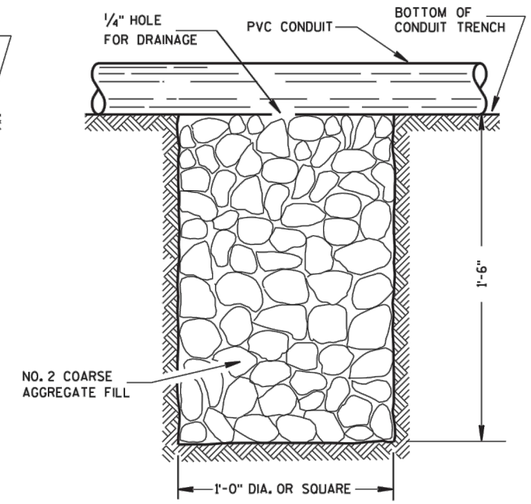

NOTE: INSTALL AT LOCATIONS WHERE PVC CONDUITS CANNOT BE PITCHED TO DRAIN INTO A PULL BOX.

DRAIN SUMP FOR PVC CONDUIT

GENERAL NOTES

DETAILS OF CONSTRUCTION, MATERIALS AND WORKMANSHIP NOT SHOWN ON THIS DRAWING SHALL CONFORM TO THE PERTINENT REQUIREMENTS OF THE CONTRACT.

METALLIC (STANDARD SPECIFICATION 652.2.2) OR NONMETALLIC (STANDARD SPECIFICATION 652.2.3) CONDUIT SHALL BE FURNISHED AND PLACED AS SHOWN.

DEPTH OF CONDUIT INSTALLED BELOW THE TRAVELED WAY SHALL BE 24 INCHES MINIMUM AND 36 INCHES MAXIMUM.

DEPTH OF CONDUIT INSTALLED THAT IS NOT BELOW THE TRAVELED WAY SHALL BE 18 INCHES MINIMUM AND 36 INCHES MAXIMUM.

ANY EXCEPTION TO THE MAXIMUM DEPTH SHALL BE ONLY WITH THE WRITTEN APPROVAL OF THE ENGINEER.

THE TRENCH SHALL NOT BE BACKFILLED PRIOR TO INSPECTION OF THE CONDUIT.

ALL METALLIC CONDUIT RACEWAY ENDS SHALL BE REAMED AND THREADED.

ALL METALLIC CONDUIT IN WHICH WIRE OR CABLE IS TO BE INSTALLED SHALL BE BUSHED WITH APPROVED THREADED BUSHINGS BEFORE INSTALLATION OF THE WIRE OR CABLE.

ALL METALLIC CONDUITS IN WHICH WIRE OR CABLE IS NOT TO BE INSTALLED SHALL BE CAPPED WITH THREADED PROTECTIVE CAPS, AS APPROVED BY THE ENGINEER.

ALL NONMETALLIC CONDUIT SHALL BE CAPPED OR PLUGGED IMMEDIATELY AFTER INSTALLATION AND SHALL REMAIN CAPPED OR PLUGGED UNTIL WIRE/CABLES ARE INSTALLED.

NONMETALLIC CONDUITS IN WHICH WIRE OR CABLE IS NOT BEING INSTALLED SHALL REMAIN CAPPED OR PLUGGED.

BENDING OF PVC ELECTRICAL CONDUIT SHALL BE ACCOMPLISHED BY USING A BLANKET OR EMERSION TYPE TANK DESIGNED FOR THE PURPOSE OF BENDING PVC ELECTRICAL CONDUIT.

ALL CUT ENDS SHALL BE TRIMMED INSIDE AND OUTSIDE TO REMOVE ALL ROUGH EDGES ON NONMETALLIC CONDUIT. (SEE NEC 347.5)

WHEN REQUIRED TO CONNECT NONMETALLIC CONDUIT TO METALLIC CONDUIT, ONLY U.L. LISTED ADAPTER FITTINGS SHALL BE USED.

PRIOR TO CONDUIT ACCEPTANCE, CONDUIT CAPS OR PLUGS SHALL BE REMOVED, AND THE CAPS, PLUGS AND CONDUIT ENDS SHALL BE THOROUGHLY CLEANED AND THEN THE CAPS OR PLUGS REINSTALLED TO ENSURE THAT THE CAPS OR PLUGS CAN BE EASILY REMOVED IN THE FUTURE.

ALL CONDUIT BEING FURNISHED AND INSTALLED SHALL HAVE THE U.L. LABEL FIRMLY ATTACHED.

CONDUIT RUNS SHALL BE THE SAME SIZE OF CONDUIT FROM ONE END TO THE OTHER (FROM PULL BOX TO PULL BOX-OR-JUNCTION BOX TO JUNCTION BOX-OR-BASE TO BASE, ETC.).

TRACER WIRE SHALL BE INSTALLED AS STATED IN THE STANDARD SPECIFICATION, ITEM 652.3.1.1.

ALL CONDUIT RUNS SHALL BE STRAIGHT (WITHOUT BENDS) FROM PULL BOX TO PULL BOX, PULL BOX TO BASE AND BASE TO BASE AS SHOWN ON THE PLANS.

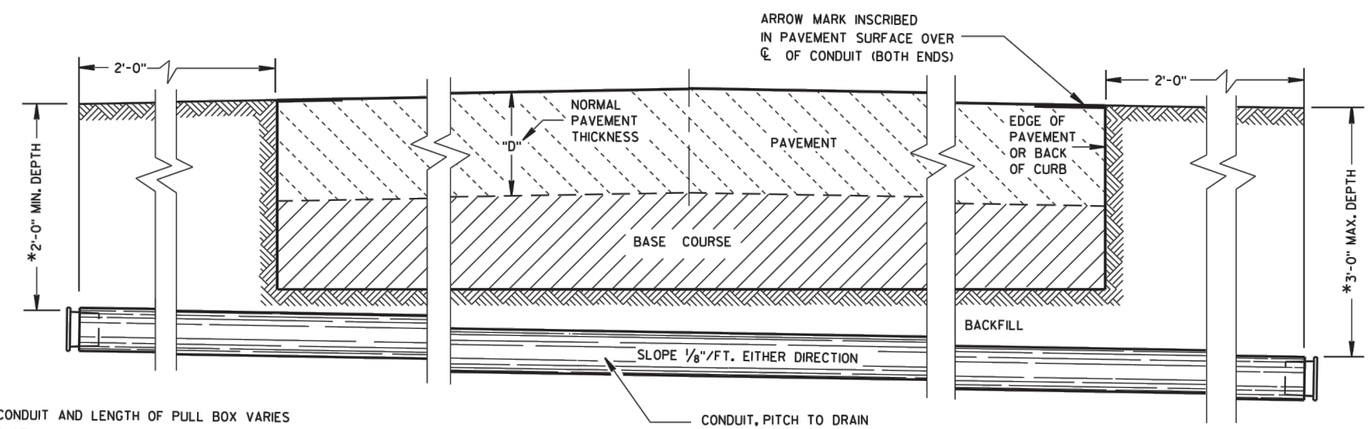

*DEPTH OF CONDUIT AND LENGTH OF PULL BOX VARIES WITH HEIGHT OF CURB USED. ALSO SEE PULL BOX S.D.D. 9B4

SIDE ELEVATION
DETAIL FOR CONDUIT UNDER PAVED HIGHWAYS

CONDUIT

STATE OF WISCONSIN
DEPARTMENT OF TRANSPORTATION

APPROVED
June, 2015 — DATE
/S/ Ahmet Demirbilek — STATE ELECTRICAL ENGINEER
FHWA

JEWELL associates engineers, inc.
Engineers - Surveyors - Architects
560 Sunrise Drive
Spring Green, WI 53588
phone: 608-588-7484
fax: 608-588-9322

THIS DOCUMENT, THE IDEAS AND DESIGNS INCORPORATED HEREIN AS AN INSTRUMENT OF SERVICE, IS THE PROPERTY OF JEWELL ASSOCIATES ENGINEERS, INC. AND IS NOT TO BE USED IN WHOLE OR IN PART WITHOUT PRIOR WRITTEN AUTHORIZATION OF JEWELL ASSOCIATES ENGINEERS, INC.

Watertown Plank Road Bridge
Elm Grove, Wisconsin

Date
7-23-15

Date	Revision
-	-
-	-

Drawing Name
Standard Detail Drawing

Sheet No.
C4.0

Jewell Project Number
E33010

TABLE OF NOMINAL DIMENSIONS AND WEIGHTS

DIMENSION IN INCHES		CORRUGATED STEEL PIPE								
PIPE DIAMETER (INSIDE)	A	12	12	12	18	18	18	24	24	24
PIPE LENGTH **	B	24	30	36	24	30	36	36	42	48
WALL THICKNESS	C	0.064	0.064	0.064	0.064	0.064	0.064	0.064	0.064	0.064
COVER	D	10 1/4	10 1/4	10 1/4	16 1/4	16 1/4	16 1/4	22 1/4	22 1/4	22 1/4
FRAME	E	14 1/2	14 1/2	14 1/2	20 1/2	20 1/2	20 1/2	26 1/2	26 1/2	26 1/2
FRAME	F	8 1/2	8 1/2	8 1/2	14 1/2	14 1/2	14 1/2	20 1/2	20 1/2	20 1/2
FRAME	G	11 1/2	11 1/2	11 1/2	17 1/2	17 1/2	17 1/2	23 1/2	23 1/2	23 1/2
WEIGHT IN POUNDS *										
FRAME AND COVER		60	60	60	110	110	110	155	155	155

* THE ACTUAL WEIGHT OF THE MANHOLE FRAME AND COVER MAY VARY WITHIN 5 PERCENT PLUS OR MINUS OF THE WEIGHTS SHOWN.

** NORMALLY USED LENGTHS. THE PROJECT ENGINEER SHALL DETERMINE IF PIPE LENGTHS, OTHER THAN THOSE SPECIFIED, SHALL BE USED, TO A MAXIMUM OF 48" (CONTINUOUS LENGTH, NON-SPLICED). THE ADDITIONAL LENGTH SHALL BE INCIDENTAL TO THE PULL BOX BID PRICE.

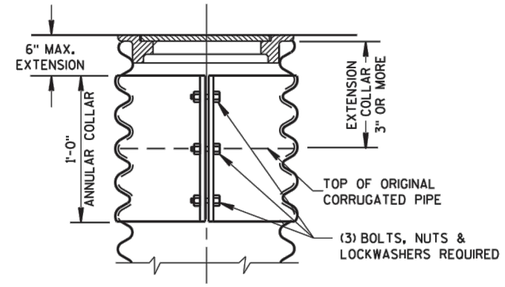

CORRUGATED PIPE EXTENDER

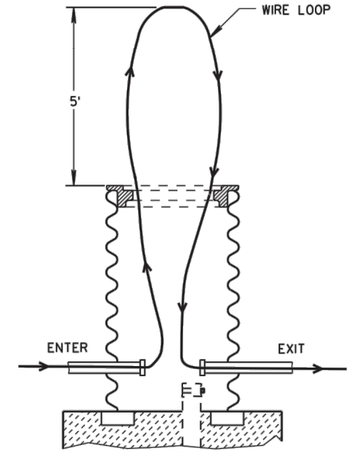

MEASUREMENT DETAIL FOR WIRE/CABLE IN THE PULL BOX

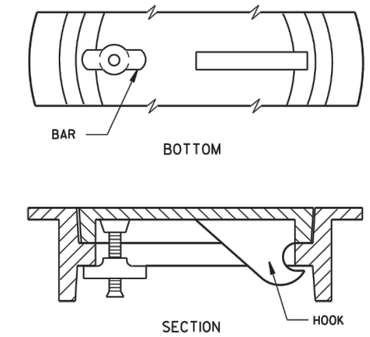

ALTERNATE COVER (LOCKING)

TIGHTENING BAR TYPE

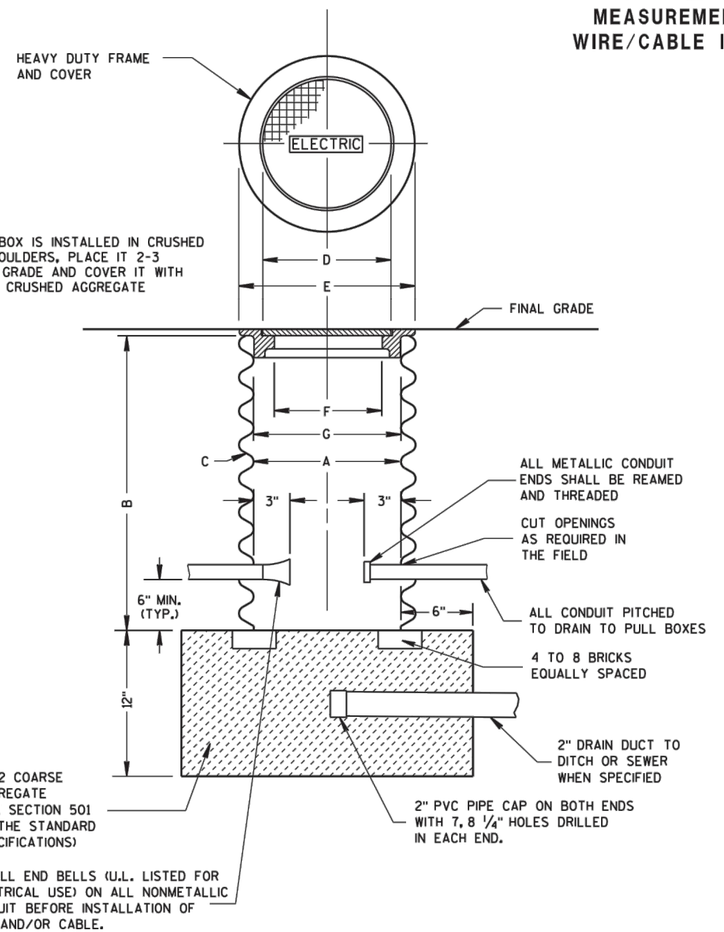

PULL BOX

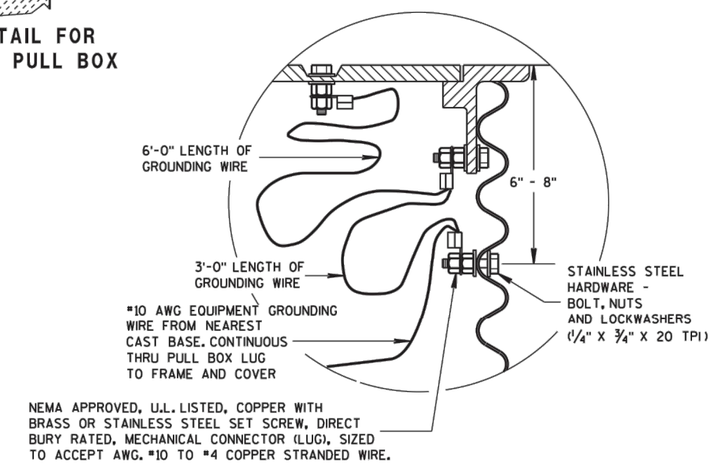

EQUIPMENT GROUNDING LUG AND LOCATION IN STEEL PULL BOXES

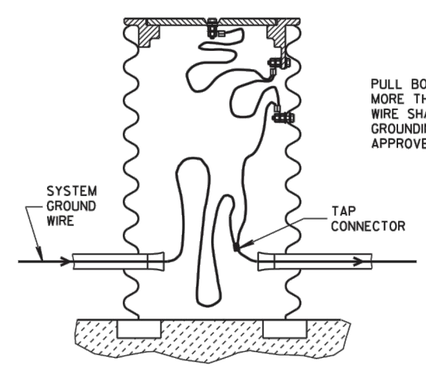

EQUIPMENT GROUNDING LUG AND LOCATION IN STEEL PULL BOXES

GENERAL NOTES

DETAILS OF CONSTRUCTION, MATERIALS AND WORKMANSHIP NOT SHOWN ON THIS DRAWING SHALL CONFORM TO THE PERTINENT REQUIREMENTS OF THE CONTRACT.

ALL FRAMES AND COVERS SHALL BE HEAVY DUTY TYPE, SUITABLE FOR VEHICULAR TRAFFIC LOADS.

PULL BOXES LOCATED IN THE ROADWAYS SHALL HAVE LOCKING COVERS.

ENTRANCE HOLES INTO PULL BOXES SHALL BE CUT WITH A CIRCULAR HOLE SAW OR HYDRAULIC CONDUIT PUNCH. HOLE SIZE SHALL BE THE OUTSIDE DIAMETER OF THE CONDUIT THAT IS TO FIT IN THE OPENING PLUS NO MORE THAN 1/4".

THE CONTRACTOR SHALL NOT INSTALL WIRE IN ANY PULL BOX UNTIL ITS INSTALLATION HAS BEEN INSPECTED AND ACCEPTED BY THE ENGINEER.

GROUNDING LUGS (MECHANICAL CONNECTORS) SHALL BE U.L. LISTED AND APPROVED FOR USE WITH COPPER WIRE.

ALL METALLIC CONDUIT IN WHICH WIRE AND/OR CABLE IS TO BE INSTALLED, SHALL BE BUSHED BEFORE INSTALLATION OF THE WIRE AND/OR CABLE.

WHEN PULL BOXES ARE INSTALLED FOR FUTURE USE, DO NOT INSTALL THE EQUIPMENT GROUNDING LUG. THE EQUIPMENT GROUNDING LUG, THE EQUIPMENT GROUNDING ELECTRODE AND THE EQUIPMENT GROUNDING CONDUCTOR SHALL BE REQUIRED AND INSTALLED UNDER A FUTURE WIRING CONTRACT.

PULL BOX

STATE OF WISCONSIN
DEPARTMENT OF TRANSPORTATION

APPROVED
Sept. 2014 — DATE
/S/ Ahmet Demirbilek — STATE ELECTRICAL ENGINEER
FHWA

JEWELL associates engineers, inc.
Engineers - Surveyors - Architects
560 Sunrise Drive
Spring Green, WI 53588
phone: 608-588-7484
fax: 608-588-9322

THIS DOCUMENT, THE IDEAS AND DESIGNS INCORPORATED HEREIN AS AN INSTRUMENT OF SERVICE, IS THE PROPERTY OF JEWELL ASSOCIATES ENGINEERS, INC. AND IS NOT TO BE USED IN WHOLE OR IN PART WITHOUT PRIOR WRITTEN AUTHORIZATION OF JEWELL ASSOCIATES ENGINEERS, INC.

Watertown Plank Road Bridge
Elm Grove, Wisconsin

Date
7-23-15

Date	Revision
-	-
-	-

Drawing Name
Standard Detail Drawing

Sheet No.
C4.1

Jewell Project Number
E33010

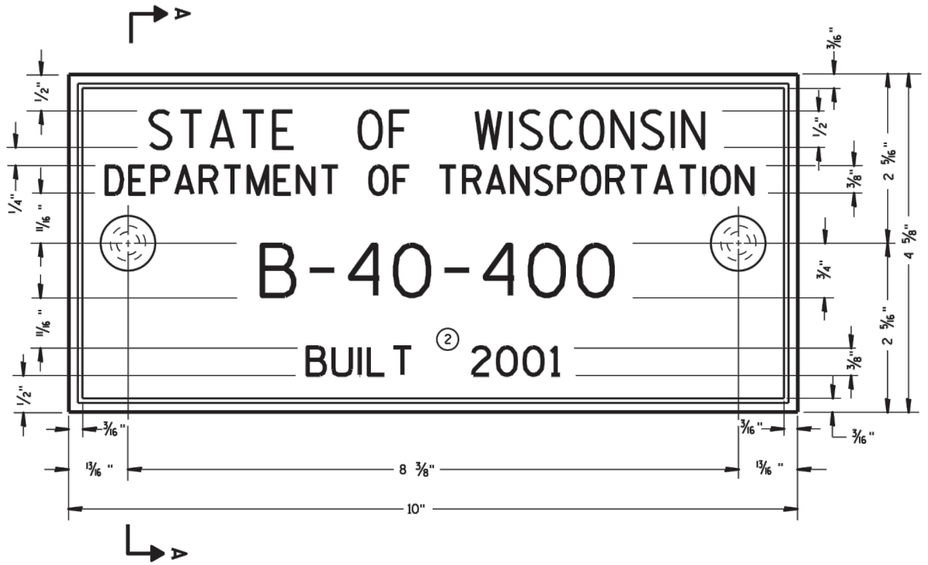

TYPICAL NAME PLATE
(BRIDGES, CULVERTS, AND RETAINING WALLS)

GENERAL NOTES

NAME PLATES TO BE INSTALLED ON BRIDGES, CULVERTS, AND RETAINING WALLS SHALL CONFORM TO THE REQUIREMENTS OF SECTION 502.3.11 OF THE STANDARD SPECIFICATIONS.

THE BRIDGE NUMBER AND YEAR BUILT SHOWN ON THIS DRAWING ARE EXAMPLES ONLY. SEE CONSTRUCTION PLANS FOR INDIVIDUAL NUMBERING AND YEAR BUILT.

① EPOXY RESIN SHALL BE FROM AN APPROVED MANUFACTURER AND USED IN ACCORDANCE WITH MANUFACTURER'S RECOMMENDATIONS.

② REHABILITATION OF AN EXISTING STRUCTURE SHOULD USE THE DATE OF ORIGINAL STRUCTURE CONSTRUCTION.

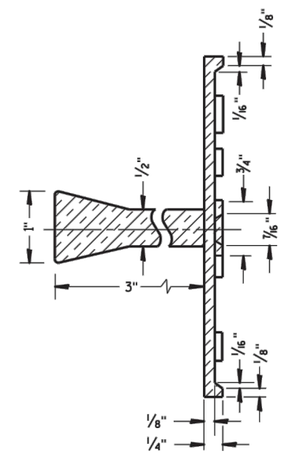

SECTION A-A

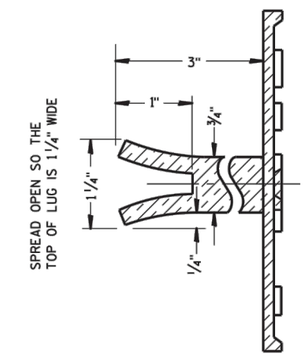

ALTERNATE LUG

FOR MULTI-UNIT STRUCTURES LINE 3 ABOVE SHALL READ

B = BRIDGE
C = CULVERT
R = RETAINING WALL

COUNTY NO.

BRIDGE NO.

UNIT NO. FOR MULTIPLE UNIT BRIDGE

B-40-400-1A

NUMBERING DESIGNATION
MULTI-UNIT STRUCTURES

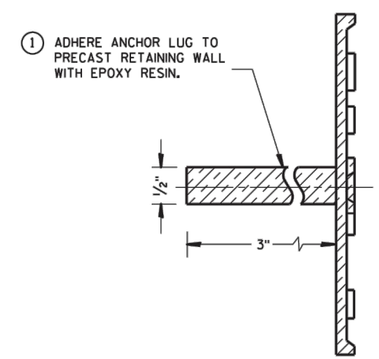

ALTERNATE LUG
(FOR ATTACHMENT TO PRECAST STRUCTURES)

NAME PLATE
(STRUCTURES)

STATE OF WISCONSIN
DEPARTMENT OF TRANSPORTATION

APPROVED
3/26/10 — DATE
/S/ Scot Becker — CHIEF STRUCTURAL DEVELOPMENT ENGINEER
FHWA

JEWELL associates engineers, inc.
Engineers - Surveyors - Architects
560 Sunrise Drive
Spring Green, WI 53588
phone: 608-588-7484
fax: 608-588-9322

THIS DOCUMENT, THE IDEAS AND DESIGNS INCORPORATED HEREIN AS AN INSTRUMENT OF SERVICE, IS THE PROPERTY OF JEWELL ASSOCIATES ENGINEERS, INC. AND IS NOT TO BE USED IN WHOLE OR IN PART WITHOUT PRIOR WRITTEN AUTHORIZATION OF JEWELL ASSOCIATES ENGINEERS, INC.

Watertown Plank Road Bridge
Elm Grove, Wisconsin

Date
7-23-15

Date	Revision
-	-
-	-

Drawing Name
Standard Detail Drawing

Sheet No.
C4.2

Jewell Project Number
E33010

*(RS) = REINFORCED CONCRETE SLAB
*(PS) = PAVED CONCRETE SHOULDER OR CONCRETE DRAINAGE SLAB (SEE DETAILS ELSEWHERE IN THE PLAN)
*(NRS) = NON-REINFORCED CONCRETE SLAB

***STANDARD DOWEL BAR DIAMETER (SEE SDD 13C11, & SDD 13C13)

Ⓐ STANDARD CONTRACTION JOINT NORMAL TO ℞ OR ℄
Ⓑ STANDARD LONGITUDINAL JOINT WITH TIE BARS.
Ⓒ 1½" EXPANSION JOINT WITH DOWEL BARS NORMAL TO ℞ OR ℄

GENERAL NOTES

THE CONTRACTOR MAY SPLICE NO. 6 BARS IN THE APPROACH SLAB FOR SKEWED STRUCTURES ONLY. STAGGER SPLICES WITH A MAXIMUM OF ONE SPLICE PER BAR. THE LENGTH OF LAP IS 20 INCHES.

TACK WELD DOWEL BARS TO THE BASKETS ON ALTERNATE ENDS.

① THE CONTRACTOR MAY USE NO. 4 BARS SPACED AT 2'-0" C-C IN BOTH THE LONGITUDINAL AND TRANSVERSE DIRECTIONS FOR TOP REINFORCEMENT AS AN ALTERNATIVE TO THE WELDED WIRE FABRIC.

② THE CONTRACTOR MAY OMIT TIE BARS BETWEEN REINFORCED SLABS WHERE SLAB REINFORCEMENT BARS EXTEND ACROSS THE CENTERLINE OR REFERENCE LINE.

③ DO NOT CONSTRUCT AN EXPANSION JOINT OR INSTALL DOWEL BARS WHEN ABUTTING AN HMA PAVEMENT.

④ USE A JOINT SEALANT MEETING THE REQUIREMENTS OF ASTM D6690.

⑤ PLACE EXPANSION CAP ON THE END OF THE DOWEL THAT IS NOT TACK WELDED TO THE BASKET. DO NOT FORCE DOWEL BAR PAST THE DOWEL STOP.

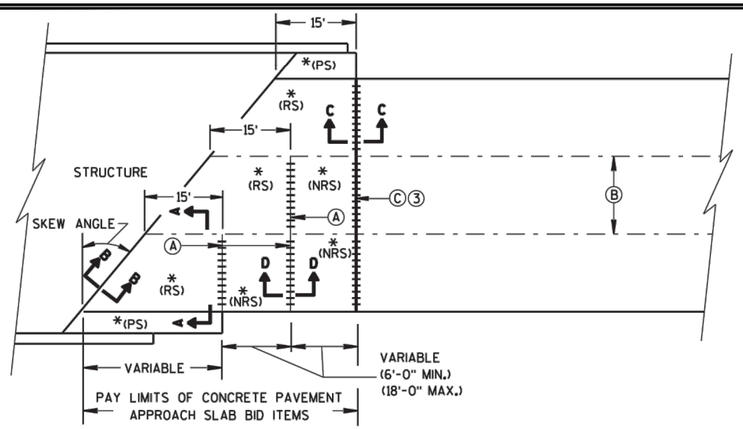

SKEWED APPROACH
(PAVEMENT MORE THAN 2 LANES)

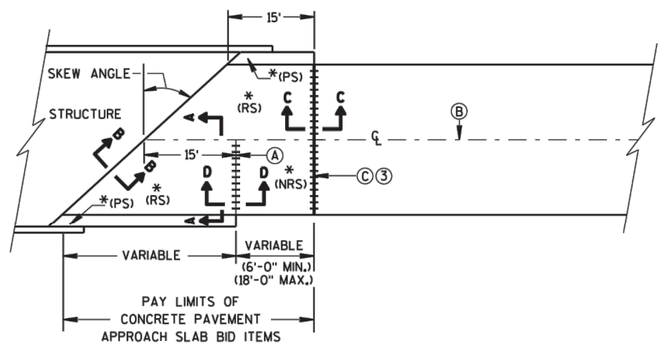

SKEWS >20°
(PAVEMENT WIDTH ≤30')

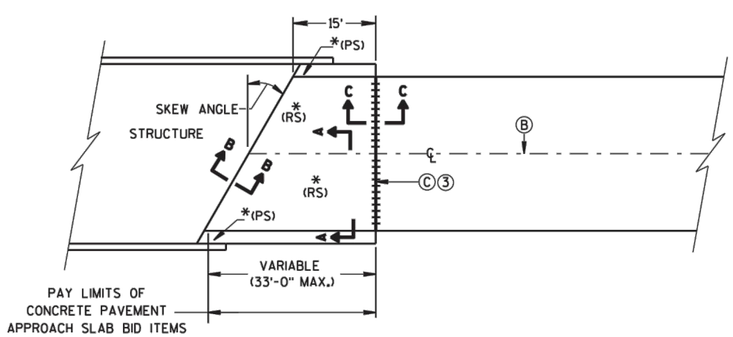

SKEWS ≤20°
(PAVEMENT WIDTH ≤30')
APPROACH SLAB AND ADJACENT PAVEMENT

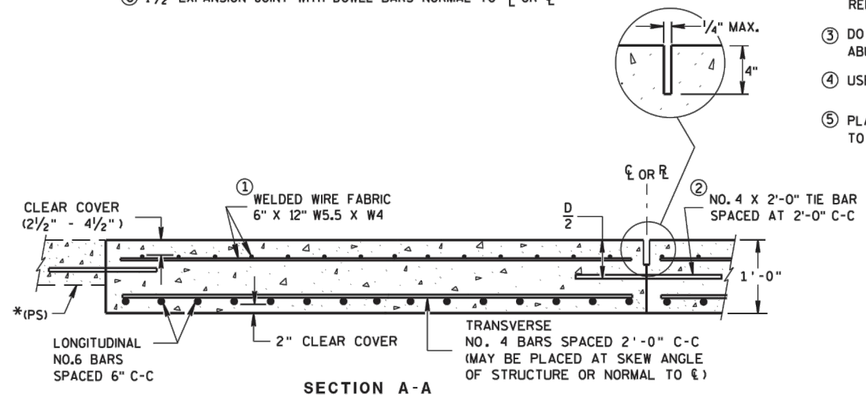

SECTION A-A
REINFORCEMENT POSITIONING DETAIL

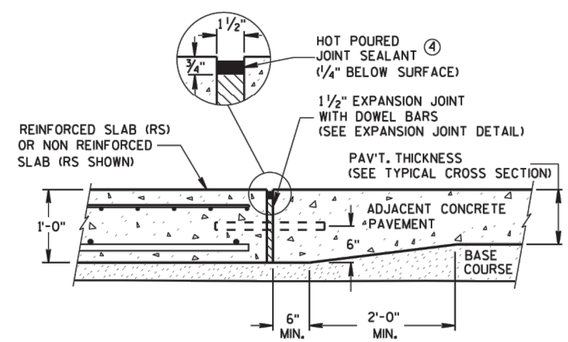

SECTION C-C
TRANSITION DETAIL
APPROACH SLAB TO ADJACENT PAVEMENT

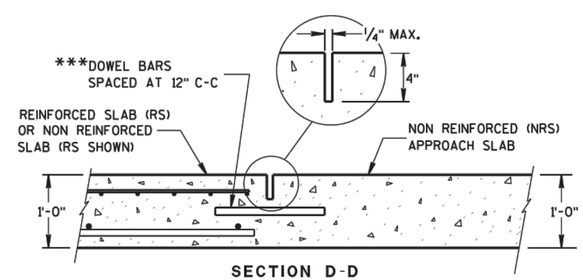

SECTION D-D
CONTRACTION JOINT

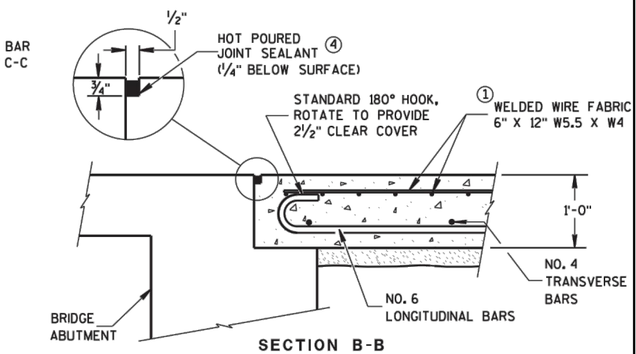

SECTION B-B
BEND DETAIL
BOTTOM REINFORCEMENT

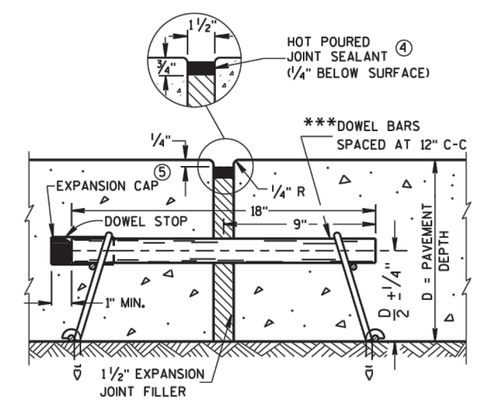

EXPANSION JOINT DETAIL

CONCRETE PAVEMENT APPROACH SLAB

STATE OF WISCONSIN
DEPARTMENT OF TRANSPORTATION

APPROVED
June, 2015
DATE
FHWA

/S/ Peter Kemp, P.E.
PAVEMENT SUPERVISOR

JEWELL associates engineers, inc.
Engineers - Surveyors - Architects
560 Sunrise Drive
Spring Green, WI 53588
phone: 608-588-7484
fax: 608-588-9322

THIS DOCUMENT, THE IDEAS AND DESIGNS INCORPORATED HEREIN AS AN INSTRUMENT OF SERVICE, IS THE PROPERTY OF JEWELL ASSOCIATES ENGINEERS, INC. AND IS NOT TO BE USED IN WHOLE OR IN PART WITHOUT PRIOR WRITTEN AUTHORIZATION OF JEWELL ASSOCIATES ENGINEERS, INC.

Watertown Plank Road Bridge
Elm Grove, Wisconsin

Date
7-23-15

Date	Revision
-	-
-	-

Drawing Name
Standard Detail Drawing

Sheet No.
C4.3

Jewell Project Number
E33010

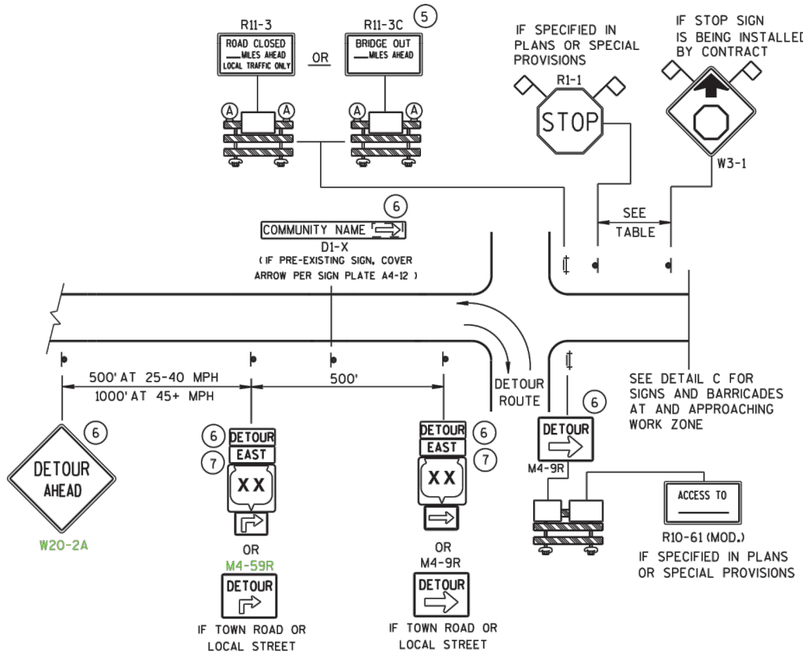

DETAIL A
MAINLINE CLOSURE WITH POSTED DETOUR

WORK ZONE GREATER THAN 1/2 MILE FROM DETOUR ROUTE (1000 FEET IF URBAN)

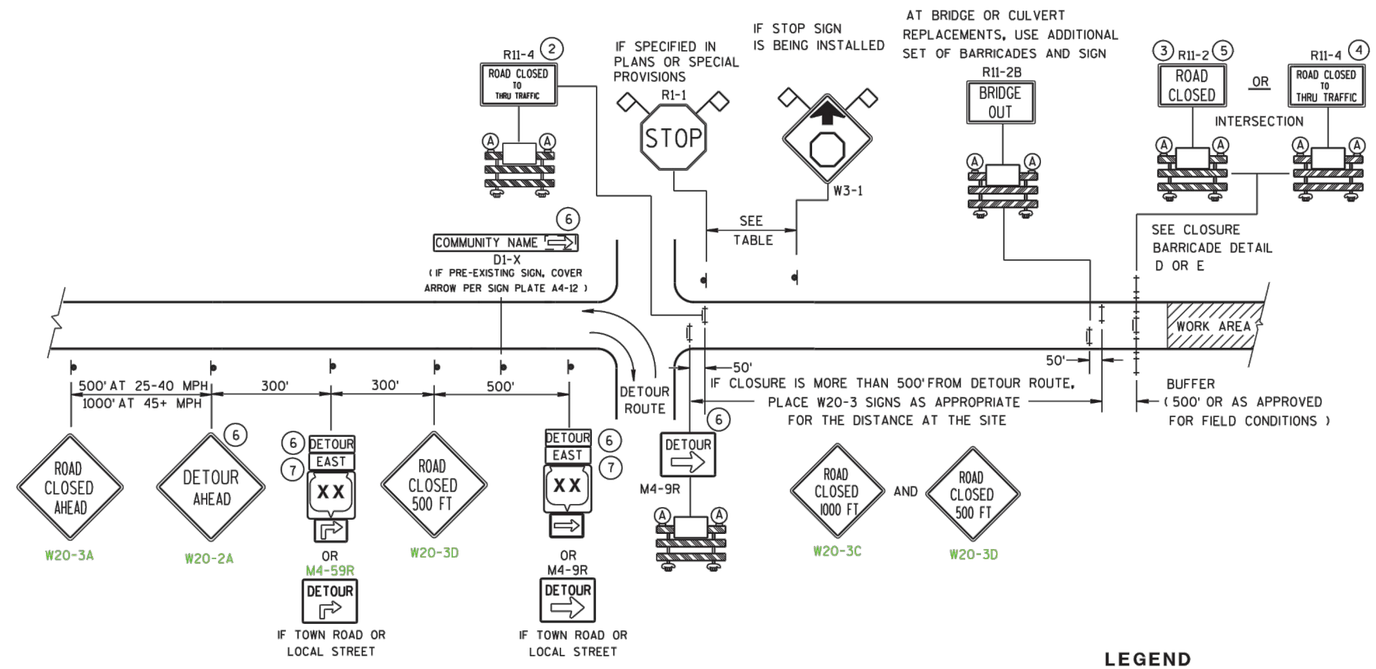

DETAIL B
MAINLINE CLOSURE WITH POSTED DETOUR

WORK ZONE LESS THAN 1/2 MILE FROM DETOUR ROUTE (1000 FEET IF URBAN)

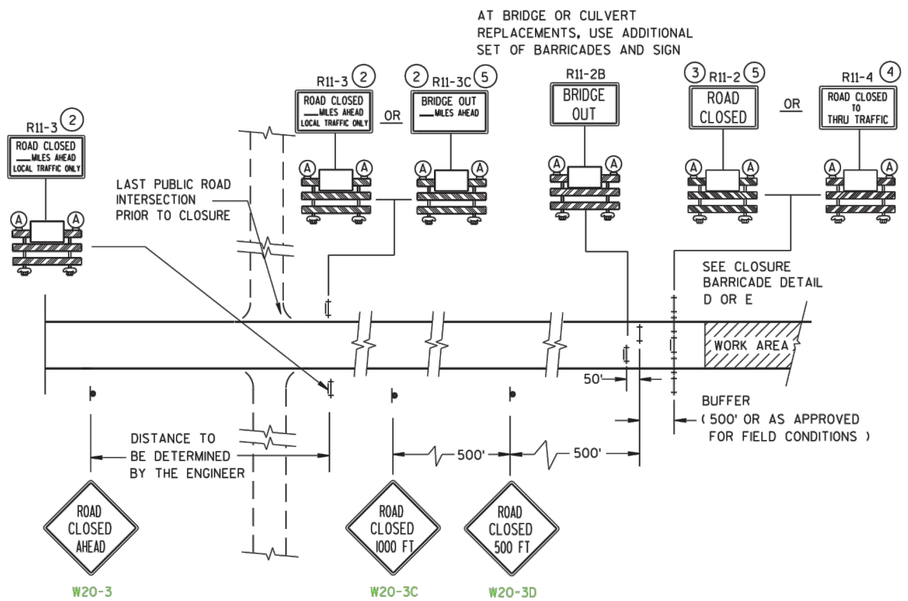

DETAIL C
MAINLINE CLOSURE, NO POSTED DETOUR

SPEED LIMIT (MPH)	"STOP AHEAD" ADVANCE WARNING DISTANCE (FT)
25	200
30	200
35	350
40	350
45	500
50	550
55	750

SEE SDD 15C2-SHEET "b" FOR GENERAL NOTES AND FOOTNOTES 1 THROUGH 7

LEGEND

- SIGN ON PERMANENT SUPPORT
- TYPE III BARRICADE
- TYPE III BARRICADE WITH ATTACHED SIGN
- TYPE "A" WARNING LIGHT (FLASHING)
- WORK AREA
- DETOUR EAST M4-8 / M3-X
- XX M1-4 OR COUNTY XX M1-5A OR XX M1-6
- M05-1 OR M06-1
- FLAGS, 16" X 16" MIN., (ORANGE)

BARRICADES AND SIGNS FOR MAINLINE CLOSURES

STATE OF WISCONSIN
DEPARTMENT OF TRANSPORTATION

DATE — STATE TRAFFIC ENGINEER OF DESIG

FHWA

JEWELL associates engineers, inc.
Engineers - Surveyors - Architects
560 Sunrise Drive
Spring Green, WI 53588
phone: 608-588-7484
fax: 608-588-9322

THIS DOCUMENT, THE IDEAS AND DESIGNS INCORPORATED HEREIN AS AN INSTRUMENT OF SERVICE, IS THE PROPERTY OF JEWELL ASSOCIATES ENGINEERS, INC. AND IS NOT TO BE USED IN WHOLE OR IN PART WITHOUT PRIOR WRITTEN AUTHORIZATION OF JEWELL ASSOCIATES ENGINEERS, INC.

Watertown Plank Road Bridge
Elm Grove, Wisconsin

Date
7-23-15

Date	Revision
-	-
-	-

Drawing Name
Standard Detail Drawing

Sheet No.
C4.4

Jewell Project Number
E33010

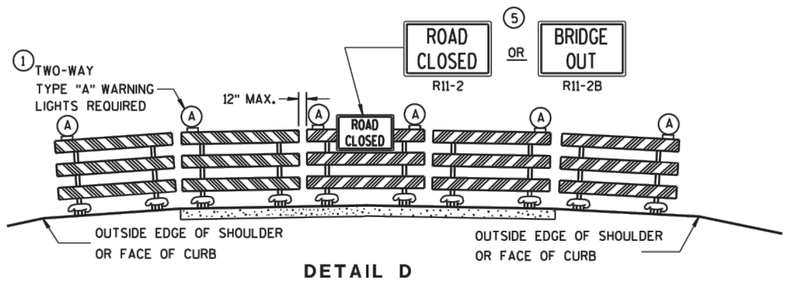

DETAIL D

ROAD CLOSURE BARRICADE DETAIL

APPROACH VIEW

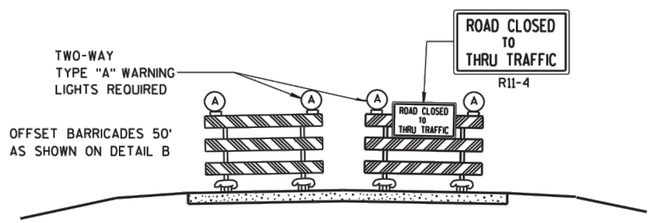

DETAIL E

LANE CLOSURE BARRICADE DETAIL

APPROACH VIEW

SEE SDD 15C2-SHEET "**a**" FOR LEGEND

GENERAL NOTES

THE EXACT NUMBER, LOCATION, AND SPACING OF ALL SIGNS AND BARRICADES SHALL BE ADJUSTED TO FIT FIELD CONDITIONS AS APPROVED BY THE ENGINEER.

ANY SIGNS TEMPORARY OR EXISTING, WHICH CONFLICT WITH TRAFFIC CONTROL "IN USE" SHALL BE REMOVED OR COVERED AS NEEDED AND AS APPROVED BY THE ENGINEER.

THE SPACING BETWEEN TRAFFIC CONTROL SIGNS SHOULD BE ADJUSTED TO NOT CONFLICT WITH AND SHOULD PROVIDE A DESIRABLE MINIMUM OF 200 FEET CLEARANCE TO EXISTING SIGNS THAT WILL REMAIN IN PLACE.

BARRICADES THAT MUST BE MOVED FOR A WORK OPERATION SHALL BE IMMEDIATELY RE-ESTABLISHED UPON COMPLETION OF THE OPERATION OR, FOR CONTINUING OPERATIONS, AT THE END OF EACH WORKING DAY.

SIGNS THAT WILL BE IN PLACE LESS THAN 7 CONTINUOUS DAYS AND NIGHTS MAY BE MOUNTED ON PORTABLE SUPPORTS.

ALL TYPE III BARRICADES SHALL HAVE RAILS REFLECTORIZED ON BOTH FACES. STRIPES SHALL BE PROPERLY SLOPED DOWN TOWARD THE TRAFFIC SIDE OR AS SHOWN IN THE ROAD CLOSURE BARRICADE DETAIL D FOR FULL ROAD CLOSURES.

TYPE "A" LOW-INTENSITY FLASHING WARNING LIGHTS SHALL BE VISIBLE ON BOTH SIDES OF THE BARRICADE.

THE R11-2, R11-3, M4-9, R11-4 AND R10-61 SIGNS PLACED ON BARRICADES SHALL COVER NO MORE THAN THE TOP RAIL. THE SIGNS SHALL NOT COVER ANY PORTION OF THE MIDDLE OR BOTTOM RAILS.

"WO AND "MO" SIGNS ARE THE SAME AS "W" AND "M" SIGNS EXCEPT THE BACKGROUND IS ORANGE.

ALL SIGNS SHALL BE 48" X 48" UNLESS OTHERWISE NOTED BELOW:

- R11-2 SHALL BE 48" X 30".
- R11-3, R11-4 AND R10-61 SHALL BE 60" X 30".
- M4-9 SHALL BE 30" X 24".
- M3-X SHALL BE 24" X 12". (36" X 18" IF NEEDED TO MATCH EXISTING SIGNS.)
- M4-8 SHALL BE 24" X 12". (30" X 15" IF NEEDED TO MATCH EXISTING SIGNS.)
- M1-4, M1-5A, AND M1-6 SHALL BE 24" X 24". (36" X 36" IF NEEDED TO MATCH EXISTING SIGNS.)
- M05-1 AND M06-1 SHALL BE 21" X 21". (30" X 30" IF NEEDED TO MATCH EXISTING SIGNS.)
- D1-X SHALL BE AS SHOWN ON SPECIFIC PROJECT SIGNING DETAIL SHEETS.
- R1-1 SHALL BE 36" X 36".

1. TWO WARNING LIGHTS SHALL BE PROVIDED ON THE CENTER BARRICADE AND A MINIMUM OF ONE WARNING LIGHT SHALL BE PROVIDED ON EACH OF THE OTHER BARRICADES WITHIN THE ROADWAY LIMITS. SPACING OF THE WARNING LIGHTS SHALL BE UNIFORM TO THE EDGE OF ROADWAY AS SHOWN (APPROX. 8-FOOT LIGHT SPACING).
2. THESE SIGNS AND BARRICADES ARE NOT REQUIRED IF ROAD CLOSURE BEGINS AT INTERSECTION.
3. FOR ROAD CLOSURE WITHOUT LOCAL ACCESS TO PROJECT, SEE ROAD CLOSURE BARRICADE DETAIL D.
4. FOR ROAD CLOSURE WITH LOCAL ACCESS TO PROJECT, SEE LANE CLOSURE BARRICADE DETAIL E.
5. FOR BRIDGE OR CULVERT REPLACEMENTS, SUBSTITUTE "BRIDGE OUT" INSTEAD OF "ROAD CLOSED" ON R11-2 AND R11-3 SIGNS.
6. INSTALL DETOUR AND COMMUNITY GUIDE SIGNS AND ARROWS ONLY IF SPECIFIED IN THE CONTRACT. IF THERE ARE EXISTING ROUTE MARKER ASSEMBLIES THAT WILL REMAIN IN PLACE, ADJUST THE LOCATION OF THE DETOUR ROUTE SIGNS TO CORRESPOND WITH THE EXISTING ASSEMBLIES. MODIFY EXISTING SIGNS WHERE POSSIBLE. SEE SPECIFIC PROJECT DETOUR SIGNING DETAIL SHEETS. IF DETOUR SIGNS ARE BEING INSTALLED BY OTHERS, PLACE THE CONTRACTED TRAFFIC CONTROL SIGNS TO ALLOW FOR PLACEMENT OF ALL WARNING, DETOUR AND GUIDE SIGNS AS SHOWN.
7. "EAST" CARDINAL DIRECTION MARKERS AND RIGHT TURN ARROWS ARE SHOWN. USE OTHER CARDINAL DIRECTIONS AND ARROWS AS APPROPRIATE.

BARRICADES AND SIGNS FOR MAINLINE CLOSURES

STATE OF WISCONSIN
DEPARTMENT OF TRANSPORTATION

DATE — STATE TRAFFIC ENGINEER OF DESIGN

FHWA

JEWELL associates engineers, inc.
Engineers - Surveyors - Architects
560 Sunrise Drive
Spring Green, WI 53588
phone: 608-588-7484
fax: 608-588-9322

THIS DOCUMENT, THE IDEAS AND DESIGNS INCORPORATED HEREIN AS AN INSTRUMENT OF SERVICE, IS THE PROPERTY OF JEWELL ASSOCIATES ENGINEERS, INC. AND IS NOT TO BE USED IN WHOLE OR IN PART WITHOUT PRIOR WRITTEN AUTHORIZATION OF JEWELL ASSOCIATES ENGINEERS, INC.

Watertown Plank Road Bridge
Elm Grove, Wisconsin

Date
7-23-15

Date	Revision
-	-
-	-

Drawing Name
Standard Detail Drawing

Sheet No.
C4.5

Jewell Project Number
E33010